HB-F500P/F500F

SERVICE MANUAL

AEP Model
: HB-F500P
France Model
: HB-F500F

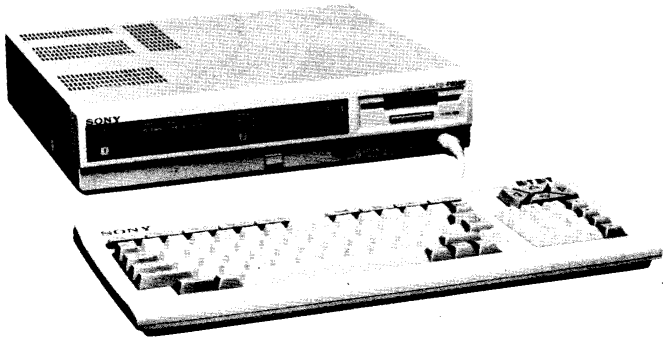

PHOTO: AEP model

HOME COMPUTER

SONY®

PART 2

Scanned and converted to PDF by HansO, 2001
Original supplied by Bas Kornalijnslijper, MCWF

TABLE OF CONTENTS

1. OPERATION 1-1

2. SERVICE INFORMATION

2-1. REMOVAL 2-1
2-1-1. Removing the Front Panel 2-1
2-1-2. Removing the EX-101 Board 2-1
2-1-3. Removing the Floppy Disk Drive 2-2
2-1-4. Removing the Heat Sink 2-2
2-2. SERVICE PARTS 2-2

3. CIRCUIT DESCRIPTION

3-1. MEMORY MAP 3-1
3-2. I/O PORT 3-2
3-3. S-3527 (MSX-SYSTEM) 3-2
3-3-1. Terminal Pin Functions 3-2
3-3-2. Functions 3-4
3-4. SLOT EXTENSION CIRCUIT 3-6
3-5. MAIN RAM 3-6
3-6. ROM SELECTOR FOR MSX-2 BASIC 3-7
3-7. FDD CIRCUIT 3-7
3-7-1. Memory Map 3-7
3-7-2. Floppy Disk, Interface, and Contorl LSI (CXD1032Q) 3-7
3-7-3. ROM Select Signal for MSX-2 Disk BASIC 3-9
3-7-4. FDC 3-9
3-7-5. Side Selection 3-10
3-7-6. Drive Selection 3-10
3-7-7. IRQ/DRQ Status 3-10
3-8. TIMER CIRCUIT 3-11
3-9. V9938 (MSX-VIDEO/VDP) 3-12
3-9-1. Main Features 3-12
3-9-2. Terminals 3-12
3-10. KEYBOARD ENCODER 3-14

4. BLOCK DIAGRAM 4-1

5. SCHEMATIC DIAGRAM AND PRINTED CIRCUIT BOARD

5-1. SEMICONDUCTOR PIN ASSIGNMENTS 5-1
5-2. FRAME 5-13
5-3. PU-35 BOARD 5-17
5-4. PS-101, LE-38 BOARD 5-25
5-5. EX-101 BOARD 5-26
5-6. CN-120, CN109 BOARD 5-28
5-7. DUS-111 BOARD 5-29
5-8. CN-110, KEYBOARD 5-32

6. ALIGNMENT

6-1. PREPARATION 6-1
6-1-1. Example of Adjusting Program (BASIC) 6-1
6-1-2. Use of Adjusting Program Example 6-1
6-1-3. Connection 6-1
6-2. CPU CLOCK FREQUENCY ADJUSTMENT 6-1
6-3. TIMER CLOCK FREQUENCY ADJUSTMENT . . . 6-1
6-4. RGB OUTPUT LEVEL ADJUSTMENT 6-1
6-4-1. R Level Adjustment 6-1
6-4-2. B Level Adjustment 6-1
6-4-3. G Level Adjustment 6-2
6-5. FDC ADJUSTMENT 6-2
6-5-1. VCO Frequency Adjustment 6-2
6-5-2. Read Pulse Width Adjustment 6-2

7. REPAIR PARTS AND FIXTURE

7-1. EXPLODED VIEWS 7-1
7-1-1. Cover Block 7-1
7-1-2. Chassis Block 7-3
7-1-3. Keyboard Unit (for HB-F500F) 7-5
7-1-4. Keyboard Unit (for HB-F500P) 7-7
7-2. ELECTRICAL PARTS LIST 7-9
7-2-1. PU-35 Board 7-9
7-2-2. DUS-11 Board 7-12
7-2-3. CN-109 Board 7-13
7-2-4. CN-110 Board 7-14
7-2-5. CN-120 Board 7-14
7-2-6. EX-101 Board 7-14
7-2-7. LE-38 Board 7-14
7-2-8. PS-101 Board 7-14
7-2-9. KEY Board 7-15
7-3. PACKING MATERIAL AND ACCESSORY 7-15

CHAPTER 2
SERVICE INFORMATION

2-1. REMOVAL

2-1-1. Removing the Front Panel

. Remove the case (upper).

① Remove the six front panel setscrews.
② Remove connector CNP26 on the PU-35 board.
③ Pull out the front panel in the direction indicated by the arrow.

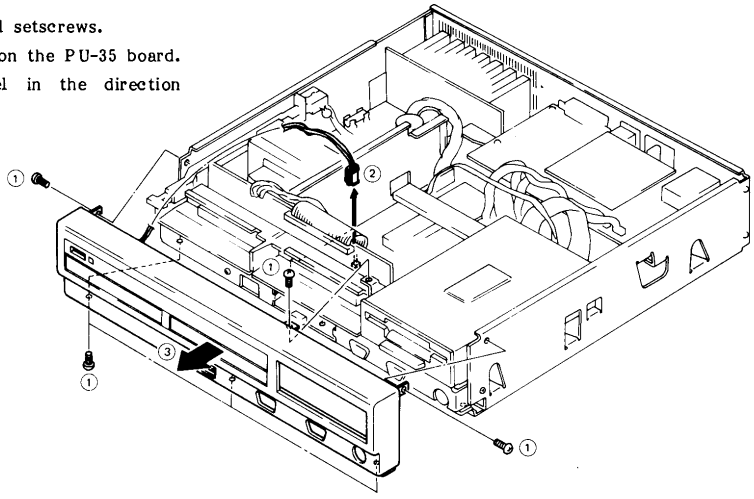

2-1-2. Removing the EX-101 Board

. Remove the case (upper).
. Remove the front panel.

① Remove the four cartridge holder setscrews.
② Remove the two cartridge holders.
③ Remove the three connectors (CNP19, CNP13, and CNP11) on the PU-35 board.
④ Pull out the EX-101 board in the direction indicated by the arrow.

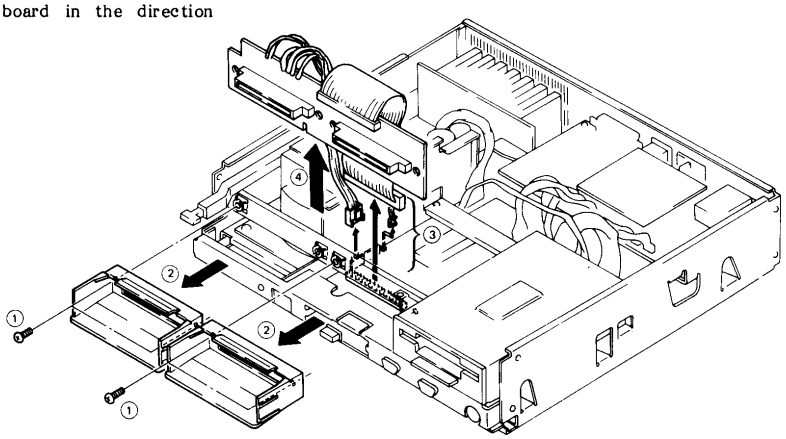

2-1-3. Removing the Floppy Disk Drive

. Remove the case (upper).

. Note: The front panel can be removed as shown in the figure below, but this is not necessary.

① Remove the two connectors at the rear of the drive unit.

② Remove the two drive unit setscrews.

③ Pull out the drive unit in the direction indicated by the arrow.

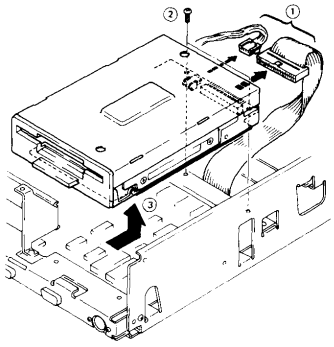

2-1-4. Removing the heat sink

. Remove the case (upper).

. Remove the bottom plate (loosen the nine setscrews).

① Remove the two setscrews (on the bottom plate) on the PS-101 board.

② Remove the two heat sink setscrews.

③ Pull out the heat sink in the direction indicated by the arrow, being careful not to drop the radiation sheet.

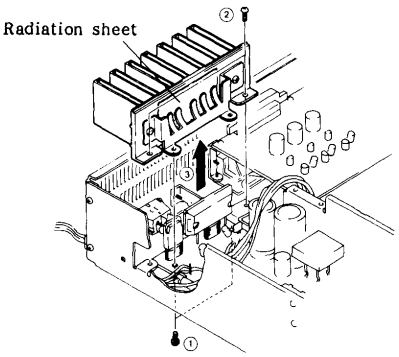

2-2. SERVICE PARTS

1. Safety Related Components Warning.
Components identified by shading marked with ⚠ on the schematic diagrams, exploded views and electrical spare parts list are critical to safe operation. Replace these components with Sony parts whose part numbers appear in this manual or in service bulletins and service manual supplements published by Sony.

2. Replacement Parts supplied from Sony Parts Center will sometimes have a different shape from the original parts. This is due to "accommodating the improved parts and/or engineering changes" or "standardization of genuine parts".
This manual's exploded views and electrical spare parts list indicate the parts numbers of "the standardized genuine parts at present".
Regarding engineering parts changes in our engineering department, refer to Sony service bulletins and service manual supplements.

3. Printed Components in Bold-Face type on the exploded views and electrical spare parts list are normally stocked for replacement purposes. The remaining parts are not normally required for routine service work. Orders for parts not shown in Bold-Face type will be processed, but allow for additional delivery time.

4. Abbreviations

Ref. No.	Description
C□□, CV□□	CAPACITOR
CN□□	CONNECTOR
CP□□	COMBINATION PARTS
D□□	DIODE
DL□□	DELAY LINE
F□□	FUSE
FL□□	FILTER
IC□□	IC
L□□, LV□□	INDUCTOR
M□□	MOTOR
ME□□	METER
PL□□	LAMP
Q□□	TRANSISTOR
R□□, RV□□	RESISTOR
RY□□	RELAY
S□□	SWITCH
T□□	TRANSFORMER
TH□□	THERMISTOR
X□□	CRYSTAL

5. Units for Capacitors, Inductors and Resistors
The following units are assumed in schematic diagrams, electrical parts list and exploded views unless otherwise specified:
Capacitors: μF
Inductors: μH
Resistors: ohm

CHAPTER 3
CIRCUIT DESCRIPTION

3-1. MEMORY MAP

The memory map viewed from the CPU is as shown below. Basic slot 0 of the memory map is extended to map RAMs and ROMs.

① Pages 0 and 1 (0000H through 7FFFH) of extended slot 0-0 are used to map the basic ROM of MSX2.

② Pages 2 and 3 (8000H through FFFFH) of extended slot 0-0 and pages 0 and 1 (0000H through 7FFFH) of extended slot 0-2 are used to map the main RAM.

③ Page 0 (0000H through 3FFFH) of extended slot 0-1 is used to map the extended MSX2 BASIC.

④ Page 1 (4000H through 7FF7H) of extended slot 0-1 is used to map the MSX2 disk BASIC.

⑤ The extended MSX2 BASIC and MSX2 disk BASIC are programmed in FC58 (32kB).

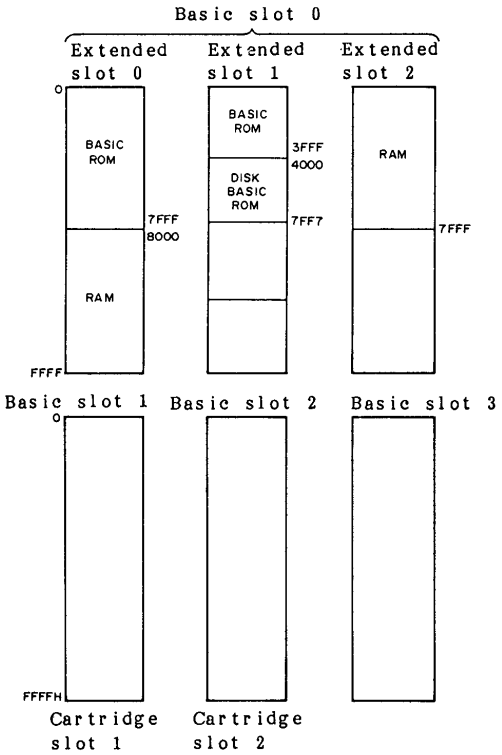

When the power switch is turned on, the power on reset is released, the MSX2 frame appears, and the MSX2 disk BASIC is loaded.

Turn on the power switch while pressing the [SHIFT] key, or press the RESET button while pressing the [SHIFT] key. The MSX BASIC of the ROM version then loads. Press the [SHIFT] key until the following message indicating the MSX BASIC of the ROM version appears on the frame.

```
MSX BASIC version 2.0
Copyright 1985 by Microsoft
```

3-2. I/O PORT

Address buses A3 through A7 are fed to the address bus input terminal (pins 12 through 16) of IC18 (S-3527).

The address bus signal determines the I/O device being selected. The I/O devices are assigned as follows:
(PPI is incorporated into IC18 (S-3527)).

A7	A6	A5	A4	A3		I/O port address
1	0	0	1	0	PRINTER	90H, 91H
1	0	0	1	1	VDP	98H, 99H
1	0	1	0	0	PSG	A0H~A2H
1	0	1	0	1	PPI	A8H~ABH
1	0	1	1	0	TIMER	B4H, B5H

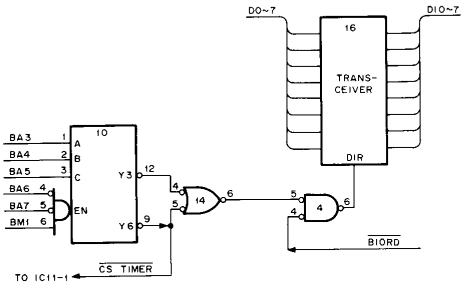

The timer is selected by output $\overline{Y6}$ of IC10. The timer, VDP, and the direction of data transferred on data bus ID0 through ID7 are specified by IC4-6 through IC10 and IC14.

3-3. S-3527 (MSX-SYSTEM)

S-3527 employs a Z80A (CPU) and is used to control peripheral devices. S-3527 has a built-in sound signal generator (SSG) and has the following 100 terminal pins at the edges of the package.

S-3527 pin assignment

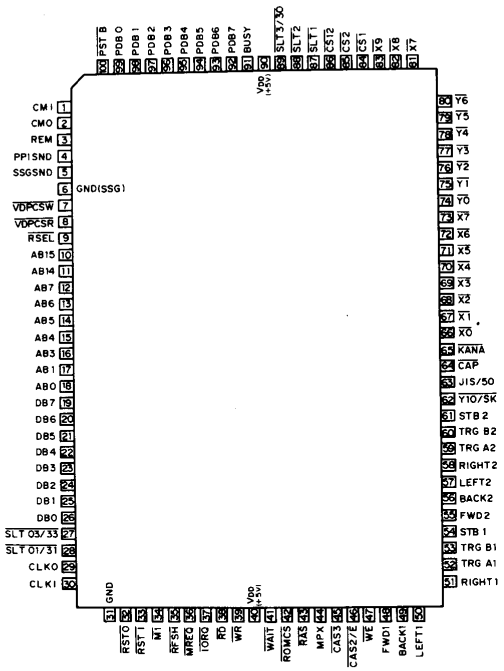

3-3-1. Terminal Pin Functions

(1) AB0, AB1, AB3 through AB7, AB14, and AB15 (Address buses)
Bus lines to input the address signal to read/write data into the memory for an input/output operation.

(2) DB0 through DB7 (Data buses)
Bus lines to read data into the memory or to output data from the I/O device.

(3) $\overline{MREQ}$ and $\overline{IORQ}$
$\overline{MREQ}$ is used to access the memory by using the signals from Z80A (CPU). $\overline{IORQ}$ is used to access the I/O port. The I/O port controls the printer or PSG.

④ $\overline{RFSH}$

Signal from Z80A(CPU).

Used as a timing signal to refresh the dyanmic RAM.

⑤ $\overline{RD}$ and $\overline{WR}$

Signal sent from Z80A (CPU). $\overline{WR}$ causes Z80A to write data into the memory or I/O device. $\overline{RD}$ causes Z80A to read data from the memory or I/O device.

⑥ $\overline{WAIT}$

Signal causing the CPU to wait until the peripherial device completes the operation when the operation of the peripheral device is delayed from that of the CPU. WAIT is output to Z80A (CPU).

⑦ $\overline{ROMCS}$

Select signal for MSX BASIC ROM (IC49).

⑧ $\overline{MPX}$

Address select signal for dynamic RAM.

⑨ $\overline{RAS}$

Refresh timing signal to periodically refresh the dynamic RAM contents.

⑩ $\overline{CAS2/E}$ and $\overline{CAS3}$

$\overline{CAS}$ for the dynamic RAM.

⑪ $\overline{WE}$

Write signal for the dynamic RAM.

⑫ $\overline{CS1}$, $\overline{CS2}$, and $\overline{CS3}$

Chip select signals to read out the contents of ROM inserted into the slot (i.e., the game machine). ($\overline{CS1}$ ranges from 4000 to 7FFF, $\overline{CS2}$ from 8000 to BFFF, and $\overline{CS12}$ from 4000 to BFFF.)

⑬ $\overline{SLT1}$, $\overline{SLT2}$, and $\overline{SLT3/30}$

Slot select signals. ($\overline{SLT1}$ selects SLOT#1, $\overline{SLT2}$ selects SLOT#2, $\overline{SLT3/30}$ selects SLOT#3 or SLOT#30.)

⑭ $\overline{SLOT01/31}$

Select signal to select extended slot#01 or #31.

⑮ $\overline{SLT03/33}$

Select signal to select extended slot#03 or #33.

⑯ $\overline{RSEL}$

Control signal to the extended slot select register.

⑰ $\overline{VDPCSR}$

Timing signal to read data out of VDP (IC25).

⑱ $\overline{VDPCSW}$

Timing signal to write data into VDP (IC25).

⑲ PDB0 through PDB7

Signals to specify data to be output to the printer.

⑳ $\overline{PSTB}$

The printer starts when this signal is sent.

㉑ BUSY

Signal input from the printer while the printer is operating. BUSY is used to determine whether data is to be sent to the printer.

㉒ $\overline{X0}$ through $\overline{X7}$

Keyboard return signals.

㉓ $\overline{Y0}$ through $\overline{Y9}$ ($\overline{Y10/SK}$)

Keyboard scan signal output. $\overline{Y10/SK}$ which is used as a serial input signal becomes valid in accordance with the reset function being selected.

㉔ FWD1 and FWD2

Joystick FWD signal or general-purpose port signal input.

㉕ BACK1 and BACK2

Joystick BACK signal or general-purpose port signal input.

㉖ LEFT1 and LEFT2

Joystick LEFT signal or general-purpose port signal input.

㉗ RIGHT1 and RIGHT2

Joystick RIGHT signal or general-purpose port signal input.

㉘ TRGA1 and TRGA2

Joystick TRGA signal or general-purpose port signal output.

㉙ TRGB1 and TRGB2

Joystick TRGB signal or general-purpose port signal output.

㉚ STB1 and STB2

General-purpose port signal output.

㉛ CMI

Data input from the cassette tape.

㉜ CMO

Data recorded into the cassette tape.

㉝ Control signal to the REM cassette.

(34) $\overline{\text{CAPS}}$

CAPS lamp signal output to the keyboard (to drive the LED).

(35) $\overline{\text{KANA}}$

Kana lamp signal output to the keyboard (to drive the LED).

(36) JIS/50

Keyboard arrangement control signal input.

(37) $\overline{\text{RSTI}}$

Initial value setting signal (input to the Schmitt trigger).

(38) $\overline{\text{RSTO}}$

Initial value setting signal (output from the Schmitt trigger).

(39) PPISND

Sound signal being output by software.

(40) SSGND

Analog sound signal being output by SSG.

(41) ø IN

Clock input signal. (Devices other than Z80A use the o IN signal as a clock.)

(42) ø OUT

Clock signal output to Z80A (CPU).

S-3527 block diagram

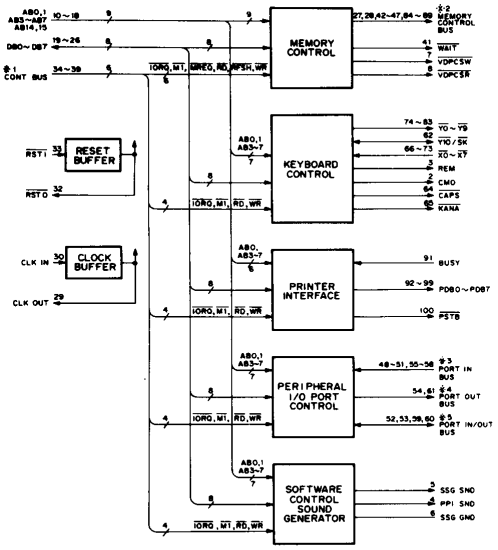

※1 CONT BUS; $\overline{\text{IORQ}}$, $\overline{\text{M1}}$, $\overline{\text{MREQ}}$, $\overline{\text{RD}}$, $\overline{\text{RFSH}}$, $\overline{\text{WR}}$
※2 MEMORY CONTROL BUS; $\overline{\text{CAS2/E}}$, $\overline{\text{CAS3}}$, $\overline{\text{CS1}}$, $\overline{\text{CS2}}$, $\overline{\text{CS12}}$, MPX, $\overline{\text{RAS}}$, $\overline{\text{ROMCS}}$, $\overline{\text{SLT1}}$, $\overline{\text{SLT2}}$, $\overline{\text{SLT 01/31}}$, $\overline{\text{SLOT 03/33}}$, $\overline{\text{SLT 3/30}}$
※3 PORT IN BUS; BACK1, BACK2, FWD1, FWD2, LEFT1, LEFT2, RIGHT1, RIGHT2,
※4 PORT OUT BUS; STB1, STB2
※5 PORT IN/OUT BUS; TRGA1, TRGA2, TRGB1, TRGB2

3-3-2. Functions

When Z80 (CPU) enters the M1 cycle, $\overline{\text{M1}}$ goes low in the T1 state. This signal is input to the S-3527 M1 terminal, then both Z80A and S-3527 start operating in the M1 mode.

(1) When S-3527 enters the M1 cycle.

(2) $\overline{\text{RAS}}$ and MPX remain low in the T1 state in the timing between the first and second clocks, then the row address is accessed by changing the dynamic memory address bus.

(3) $\overline{\text{MREQ}}$ and $\overline{\text{RD}}$ for Z80A (CPU) go low in the T1 state and are sent to S-3527. $\overline{\text{CAS}}$n, $\overline{\text{CS}}$, $\overline{\text{ROMCS}}$, and/or $\overline{\text{SLT}}$ are sent, responding to MREQ and RD, by using the slot specification register within S-3527. These are used to access the memory, and the operation code is fetched from the memory and loaded into the CPU instruction register.

(4) When $\overline{\text{WAIT}}$ which is sent from S-3527 to Z80A remains high in the T2 state, Z80A enters the T3 state. When WAIT remains low, Z80A enters the wait (Tw) state and remains in this state until WAIT goes high.

(5) Z80A outputs the refresh register contents to the address bus in the T3 state. $\overline{\text{RFSH}}$ then goes low and is sent to S-3527.

(6) $\overline{\text{MREQ}}$ which is output from Z80A changes the state from low to high in the T4 state. The dynamic RAM contents can be refreshed by the address signal on the address bus while $\overline{\text{MREQ}}$ remains high with $\overline{\text{RFSH}}$ low.

The operation code is fetched from the memory in the T4 state on the M1 cycle timing diagram. (10) indicates the T1 state in succeeding cycles. The refresh address is output on the address bus, and this state is indicated by $\overline{\text{RFSH}}$ remaining low. When the refresh address on the address bus is stopped, $\overline{\text{RFSH}}$ goes from low to high.

M1 cycle timing

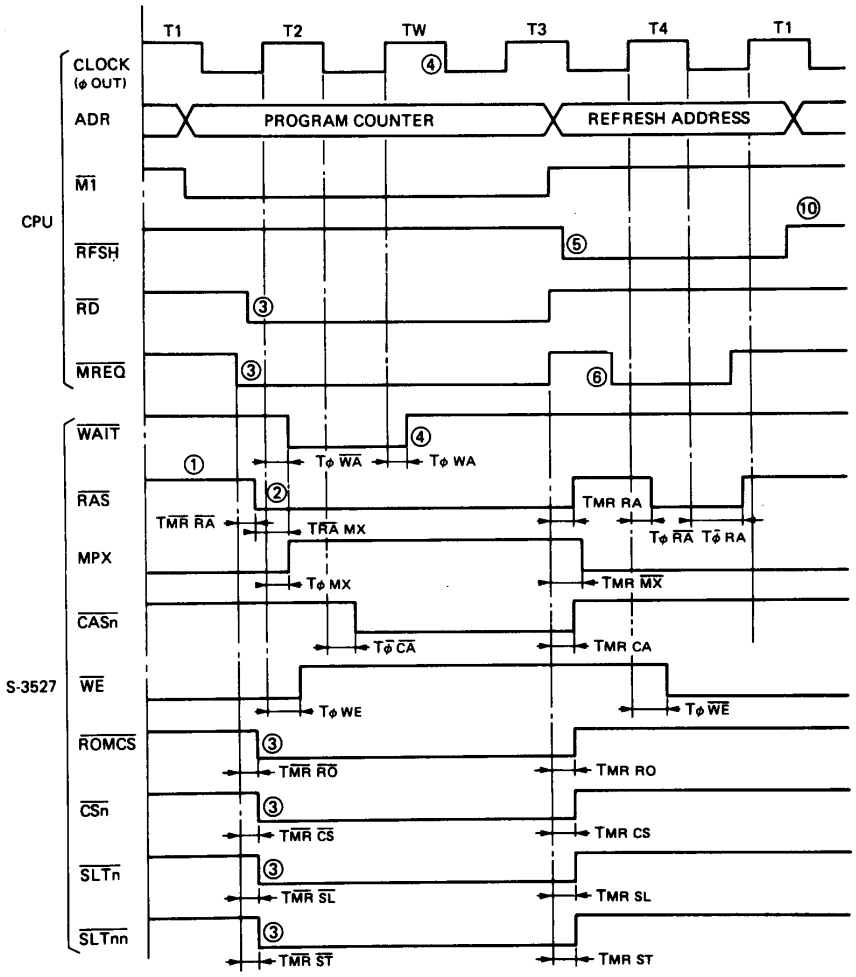

3-4. Slot Extension Circuit

$\overline{RSEL}$ (input to pin 9 of S-3527 (IC18)) is used to extend the slots. Any address input signals other than those specified by S-3527 (i.e., BA2, and BA8 through BA13) are NAND'ed together to generate RSEL.

Address FFFFH is decoded by using RSEL, and the S-3527 extension slot register can be used when address FFFFH is decoded.

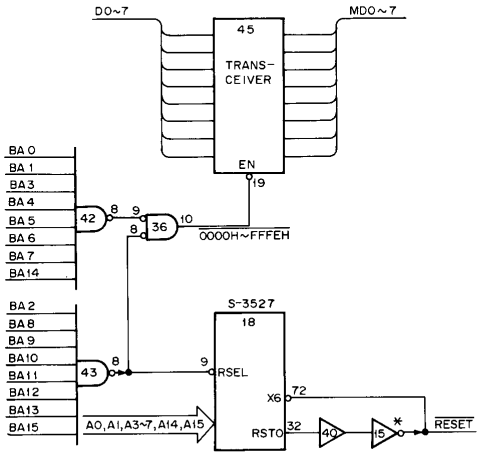

When the S-3527 extension slot register is used, the use of the main RAM is inhibited by BA15. BA15 is input to IC43 (NAND gate) to generate $\overline{RSEL}$ which decodes data at address FFFFH.

If $\overline{X6}$ (pin 72 of S-3527) goes low during the power-on sequence, slot 0 is extended.

3-5. MAIN RAM

The main RAM has a map which consists of pages 2 and 3 (addresses 8000H through FFFFH) of extended slot 0-0 and pages 0 and 1 (addresses 0000H through 7FFFH) of extended slot 0-2.

The column address latch signal ($\overline{CAS}$) is generated by passing $\overline{CAS2}$ and $\overline{CAS3}$ of S-3527 through NAND gate IC14.

$\overline{CAS2}$ is generated when one of addresses 0000H through 7FFFH on slot 0-2 is accessed, or when one of addresses 8000H through BFFFH on slot 0-0 is accessed. $\overline{CAS3}$ is generated when one of addresses C000H through FFFFH on slot 0-0 is accessed.

$\overline{WE}$ is used to write data into RAM. $\overline{RAS}$ is used to latch the row address. $\overline{RD}$ is used to enable data to be output.

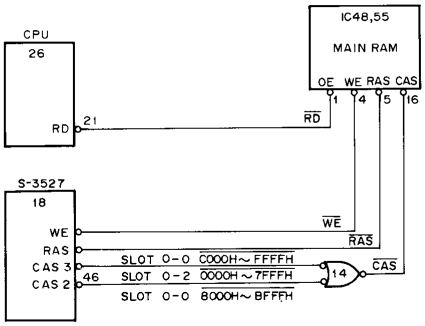

3-6. ROM SELECTOR for MSX-2 BASIC

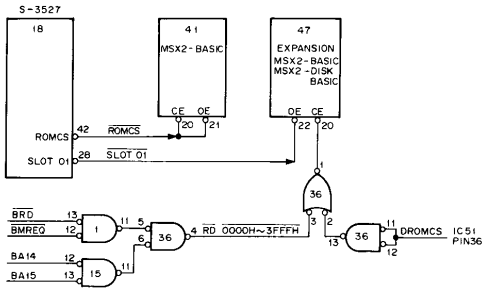

① ROM IC41 for MSX-2 BASIC is selected by $\overline{\text{ROMCS}}$ at pin 42 of S-3527 (IC-18). When the CPU reads data at addresses 0000H through 7FFFH on slot0, $\overline{\text{ROMCS}}$ goes low.

② Extended MSX-2 BASIC is stored at addresses 0000H through 3FFFH in IC47, and MSX-2 disk BASIC is stored at 4000H through 7FF7H in IC47.

$\overline{\text{RD}}$ is generated at one of 0000H through 3FFFH by $\overline{\text{BRD}}$, BMREQ, BA14, and BA15 of IC36, and is input to pin 3 of IC36 to select IC47.

$\overline{\text{SLOT01}}$ at pin 29 of S-3527, which is an extended slot select signal, is input to the $\overline{\text{OE}}$ terminal of IC47 to read data out of ROM.

$\overline{\text{DROMCS}}$ at pins 11 and 12 of IC36, which is an ROM select signal for MSX-2 disk BASIC, is output from IC50 (CXD1032Q).

3-7. FDD CIRCUIT

3-7-1. Memory Map

The FD interface is assigned to addresses 4000H through 7FFFH on the memory map.

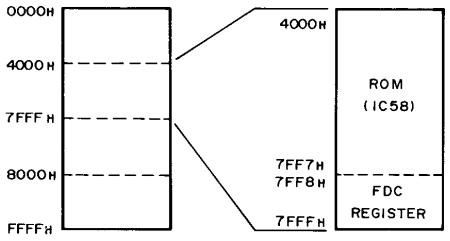

3-7-2. Floppy Disk, Interface, and Control LSI (CXD1032Q)

The address decoder, timer, clock oscillator, and selector are implemented on one chip. CXD-1032Q (49 pins) has the following configurations:

CXD-1032Q pin assignment

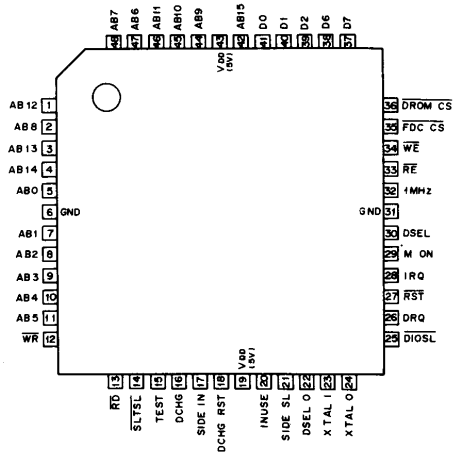

CXD1032Q pin functions

① AB0 through AB15 (Address buses)
Bus line for the address signal to read data out of the memory or to write data into the memory, or to perform the input/output operations.

② D0 through D2, D6, and D7 (Data buses)
Bus line for data to be input to or to be output from the device.

③ $\overline{BWR}$
Write signal input. This signal is gated together with $\overline{SLTSL}$, and the resultant signal (WE) is fed to the floppy disk controller (FDC).

④ $\overline{BRD}$
Read signal input. This signal is gated together with $\overline{SLTSL}$, and the resultant signal ($\overline{RE}$) is fed to the floppy disk controller (FDC).

⑤ $\overline{SLTSL}$
Slot select signal input.

⑥ TEST
Test signal input. Normally, set to low.

⑦ SIDE IN
Specifies either the single or double side of the disk. When low, this signal specifies the single side.

⑧ DRIVE 0
Drive 0 select signal output.

⑨ DRQ IN
Data request input.
When data is read from the disk by floppy disk controller (FDC) while this signal is being specified, data is loaded into the register. When data is written into the disk by floppy disk controller (FDC) while this signal is being specified, a check is made to whether the register is empty, and the FDD motor is controlled if the register is empty.

⑩ IRQ IN
FDC command end signal input.

⑪ MON
FDC motor on/off control signal.

⑫ DRIVE 1
Drive 1 select signal output.

⑬ 1MH CLOCK
1MHz clock signal output. This signal is fed to the CLK input terminal of the floppy disk controller (FDC).

⑭ $\overline{RE}$
Data control signal to output data which has been written into the register of the floppy disk controller by specifying $\overline{WE}$.

⑮ $\overline{WE}$
Data control signal to write data into the register from the DAL of the floppy disk controller.

⑯ $\overline{CS}$
Chip select signal for the floppy disk controller (FDC). When CS is specified, data can be transferred to or from the floppy disk controller (FDC).

⑰ $\overline{ROMCS}$
Disk ROM select signal.

3-7-3. ROM Select Signal for MSX-2 Disk BASIC

$\overline{\text{SLOT01}}$ is fed from pin 28 of S-3527 IC18 to pin 14 ($\overline{\text{SLTSL}}$ terminal) of IC50. When the CPU accesses one of addresses 4000H through 7FF7H, $\overline{\text{DROMCS}}$ is output from pin 36 of CAD-1032Q CI50, and this signal is then input to pins 11 and 12 of IC36 to select MSX-2 disk BASIC. $\overline{\text{SLOT01}}$ is also fed to pin 22 ($\overline{\text{OE}}$ terminal) of IC47 to read data from ROM.

The select signal at pin 13 of IC36 is used to select the extended MSX-2 BASIC for IC47.

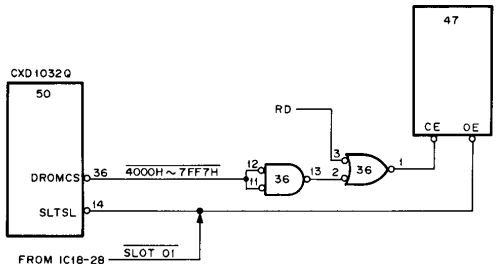

3-7-4. FDC

Memory map contents

Port address	Hardware into which data is written by CPU	Hardware from which data is read by CPU
7FF8H	Command register	Status register
7FF9H	Track register	Track register
7FFAH	Selector register	Selector register
7FFBH	Data register	Data register
7FFCH	Side selection	Side selection
7FFDH	Drive selection	Drive selection
7FFFH		IRQ/DRQ status

① FDC select

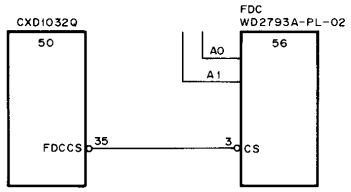

Each register in the floppy disk controller (IC56) is assigned to one of addresses 7FF8H through 7FFBH.

When address signals A0 and A1 and $\overline{\text{FDCCS}}$ at pin 35 of IC50 ($\overline{\text{CS}}$ terminal) are input to the $\overline{\text{CS}}$ terminal (pin 3) of IC56, the corresponding register is selected.

$\overline{\text{FDCCS}}$ is output when one of addresses 7FF8H through 7FFBH is accessed.

CR ; COMMAND REGISTER
DR ; DATA REGISTER
DSR; DATA SHIFT REGISTER
SCR; SECTOR REGISTER
TR ; TRACK REGISTER
STR; STATUS REGISTER

Register selection

CS	A1	A0	RE = 0	WE = 0
1	X	X	NON SELECT	DAL=HI-Z
0	0	0	STR	CR
0	0	1	TR	TR
0	1	0	SCR	SCR
0	1	1	DR	DR

0 ; LOW LEVEL
1 ; HIGH LEVEL
X ; DON'T CARE
HI-Z; HIGH IMPEDANCE

② FDC register operations

- Command register (CR)
  8-bit write register. The command which corresponds to WD2793-02 is written into the processor. When the execution of any command other than the WD2793-02 command is completed, the command write operation starts.
- Status register (STR)
  8-bit read register. This register indicates the internal status of WD2793-02, the processing status of command execution, and the disk drive status. The bit functions vary depending on whether the command is being executed or the command has been executed.
- Data register (DR)
  Read/Write register. Data read from the disk is loaded into DR; data which has been written into DR is written into the disk. The designated track address is written into DR during seek operation.

- Track register (TR)
  8-bit read/write register. FFH is loaded into TR when the master reset signal (MR) changes from low to high and vice versa. When TR00 goes low, the contents of TR becomes 00H.
  The track number where the head is located is normally stored in this register. For some types of commands in WD2793-02, the contents of this register can be updated. If a read data command or a write data command is specified, the contents of this register are compared with the ID field track number which has been read out of the disk. If they coincide, a read or write operation can be performed.
- Selector register (SCR)
  8-bit read/write register. If a read data command or a write data command is specified, the contents of this register are compared with the ID field track number which has been read out of the disk. If they coincide, a read or write operation can be performed.
  When a read address command is specified, the ID field track number is stored.

3-7-5. Side Selection

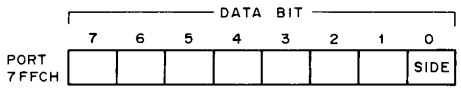

When SIDE is specified as 0, side 0 is selected. When SIDE is specified as 1, side 1 is selected.

If address bus signal 7FFCH is specified when $\overline{SLTSL}$ at pin 14 of IC50 is low, D0 at pin 41 of IC50 and SIDE IN at pin 17 of IC50 are ANDed together to generate a SIDE SELECT signal. If address bus signal 7FFCH is specified when both $\overline{SLTSL}$ and $\overline{RD}$ are low, the inverted D0 signal becomes a SIDE SELECT signal and appears at pin 21 of IC50.

When SIDE SELECT is low, SIDE 1 (upper) is selected. When SIDE SELECT is high, SIDE 0 (lower) is selected.

If SIDE IN at pin 17 of IC50 is high and unchanged, both sides are indicated.

3-7-6. Drive Selection

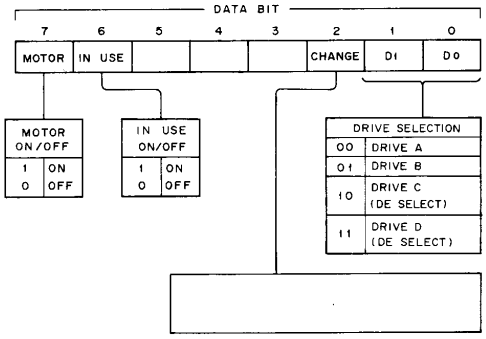

3-7-7. IRQ/DRQ Status

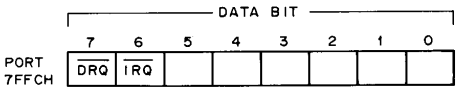

When command execution is completed or aborts, IRQ goes low.

When a data write/read operation is requested, DRQ goes low.

3-8. TIMER CIRCUIT

This unit has an internal 24-hour timer which is backed up by a built-in Ni-Cd battery.

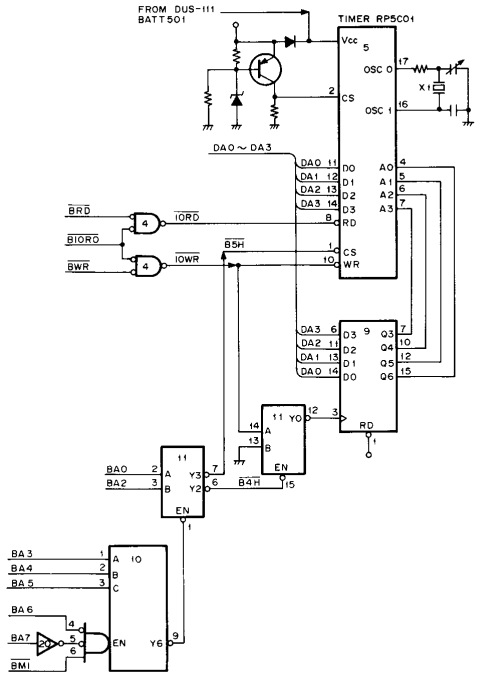

Addresses BA0 an BA2 are fed to the address decoder input terminals (2 and 3) of IC11 (1/2). Combination of BA0 and BA2 selects ports B4H and B5H of MSX timer.

The MSX timer port operations are as follows:

B4H . . . . . Address set

B5H . . . . . Data transfer

These become valid only when $\overline{\text{BIORQ}}$ and $\overline{\text{BRD}}$, or $\overline{\text{BIORQ}}$ and BWR are output together.

The block diagram of the timer IC (IC5) is shown below.

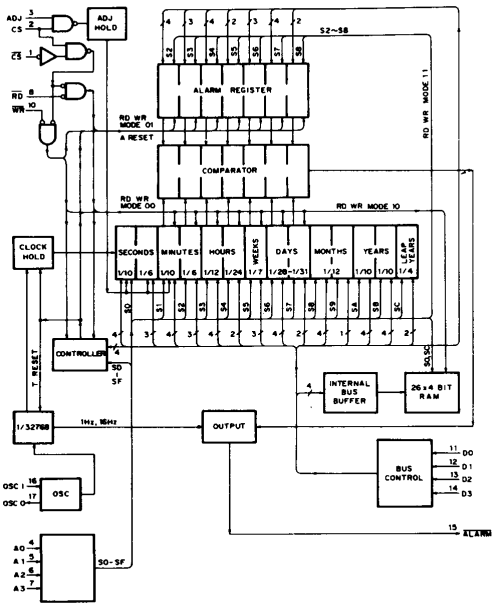

3-9. V9938 (MSX-VIDEO/VDP)

The VDP of this unit contains V99387 which has been developed for MSX-2. VDP is software-compatible with the MSX-1 VDP (TMS9918A or TMS9118A), and is assigned to 98H and 99H of the I/O port.

3-9-1. Main Features

- Single 5V power supply
- The linear RGB signals and composite video signals are output.
  The NTSC encoder of this unit generates the composite video output signal from the RGB signals, but this unit does not use the composite signal which can be generated by IC.
- Up to 512 colors can be displayed by using the built-in color pallet.
- Up to 512 x 424 pixels can be displayed in 16 colors.
- Bit map graphics is possible.
- Up to 256 colors can be displayed concurrently.
- A display memory area of 16K bytes to 128K bytes can be used.
- DRAMs of 16K one-bit words, 16K 4-bit word, 64K one-bit words, and 64K 4-bit words can be used.
- The automatic refresh function for DRAMs has 256 addresses and can be performed in 4msec.
- The extended VRAM can be connected to the system.
- The mouse and light pen interfaces are built in.
- Up to eight sprites can be displayed in each line.
- The colors of the respective sprites can be specified in horizontal line units.
- This unit provides the Area Move, Line, and Search commands.
- This unit performs logical operations.
- The address can be specified in coordinates.
- External synchronization is possible.
- Superimposing can be done.
- Data can be digitized.
- A multiple MSX video signal can be generated.
- The extended color pallets can be installed externally by using the color bus output.

IC block diagram

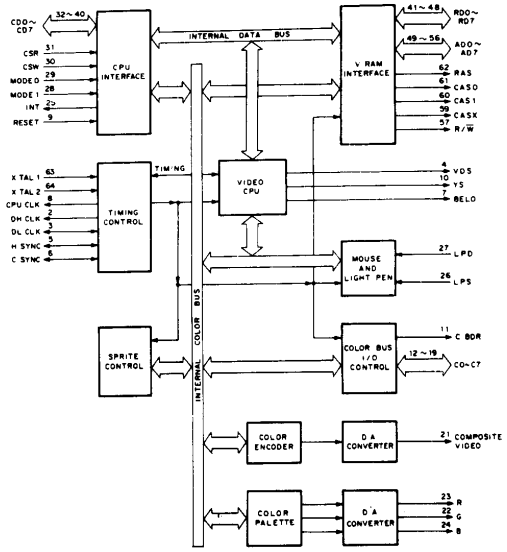

3-9-2. Terminals

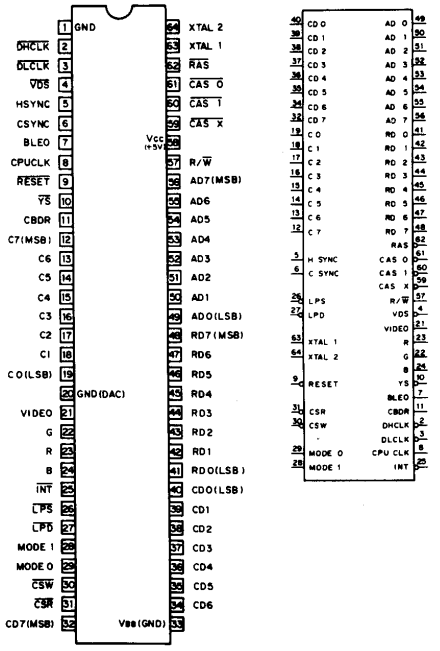

① CD0 through CD7
Data bus for CPU.

② RD0 through RD7
Data bus for VRAM.

③ AD0 through AD7
Data bus for VRAM.

④ C0 through C7
Color bus.
Normally used to output a color code. Used as an input port during digitizing. When a mouse is used, the high-order half byte is used for the mouse.
C4 = XA
C5 = XB
C6 = YA
C7 = YB

⑤ MODE0
CPU interface mode select 0.

⑥ MODE 1
CPU interface mode select 1.

⑦ $\overline{CSR}$
CPU-Read Strobe.

⑧ $\overline{CSW}$
CPW-Write Strobe.

⑨ $\overline{RAS}$
VRAS Row Address Strobe.

⑩ $\overline{CAS0}$
VRAM column address strobe 0 (in the first half of the VRAM addresses).

⑪ $\overline{CAS1}$
VRAM column address strobe 1 (in the second half of the VRAM addresses).

⑫ $\overline{CASX}$
VRAM column address strobe X (for the extended VRAM).

⑬ R/$\overline{W}$
VRAM data select.
Low: Access VRAM for displaying data
High: Access VRAM for any other purposes

⑭ VIDEO
NTSC composite video signal output.

⑮ R, G, and B
Linear RGB signal output.

⑯ $\overline{YS}$
Selects either the MSX video RGB output signal or the external video signal (this signal is valid for superimposing).
High: Indicates that the MSX video output signal is transparent.
Low: Indicates that the MSX video output signal is not transparent.

⑰ BLE0
Tri-state signal output. When HSYNC goes from high to middle, it is output. When HSYNC goes from middle to low, it is input.
High: Any timing other than HSYNC, or color burst timing.
Middel: Any timing other than HSYNC and the color burst.
Low: HSYNC input

⑱ HSYNC
Tri-state signal. When HSYNC goes from high to middle, it is output. When HSYNC goes from middle to low, it is input.
High: Any timing other than HSYNC, or color burst timing.
Middle: Any timing other than HSYNC and the color burst.
Low: HSYNC input.

⑲ CSYNC
Tri-state signal. When CSYNC is high, the composite SYNC signal is output. When CSYNC is low, the VSYNC signal is input.

⑳ CBDR
Indicates the direction in which the signal travels on the color bus.
High: Data is input to the color bus
Low: Data is output from the color bus

㉑ $\overline{LPS}$
Light pen switch input. When a mouse is used, the mouse switch is set to on or off corresponding to the state of this signal.
Low: SW on
High: SW off

㉒ $\overline{LPD}$
Indicates that the light signal is detected in the light pen. When a mouse is used, the mouse switch is set to on or off corresponding to the state of this signal.
Low: Indicates that the light has been detected or that the switch is set to on.
High: Indicates any state other than the above.

㉓ $\overline{\text{DHCLK}}$

Dot clock signal output at approximately 10.7MHz for high resolution. Open drain signal output.

㉔ $\overline{\text{DLCLK}}$

Dot clock signal output at approximately 5.4MHz for high resolution. Open drain signal output.

This signal can be input from the mode register, and it can be used for the MSX video signal.

㉕ XTAL 1/2

Connected to the crystal oscillator. When an external clock is used, it should be fed to the unit through this pin.

㉖ CPUCLK

Outputs one sixth of the crystal oscillator frequency.

㉗ $\overline{\text{INT}}$

CPU interrupt output. Open drain output.

Low: Indicates that an interrupt has occurred.

㉘ $\overline{\text{RESET}}$

Indicates that the circuits within the MSX video system are initialized.

3-10. KEYBOARD ENCODER

This machine provides separate keyboards and thus data is multiplexed because of the limited number (13 lines) of lines within a cable. Y0 through Y10 are sent from IC18 (S-3527) to the priority encoder consisting of IC29 and IC35, and then converted into a 4-bit signal. These are multiplexed with X4 through X7 of the return signal, and the sent out while data is written into PPI of IC18 (S-3527).

Data is first written into PPI of IC18 (S-3527) by using the CPU, then latched into latch IC21 on the keyboard by the refresh signal while an instruction is being fetched from the memory immediately after the write operation. When latched, data cannot be sent out.

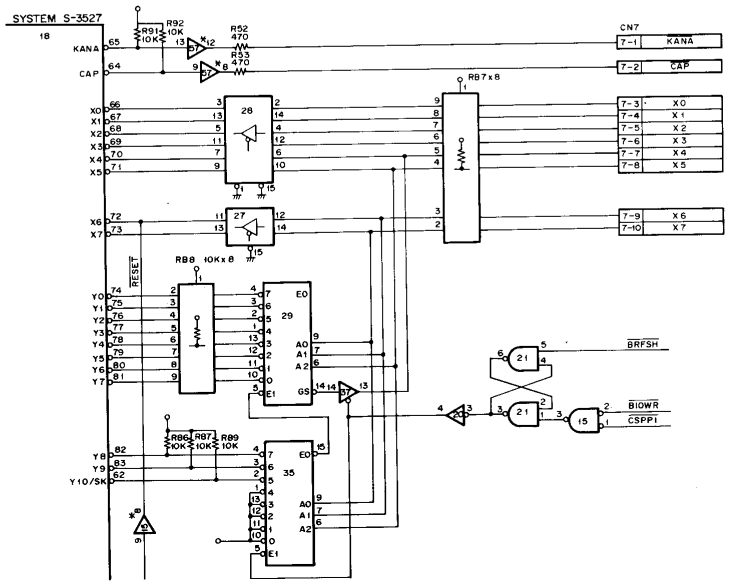

CHAPTER 4
BLOCK DIAGRAM

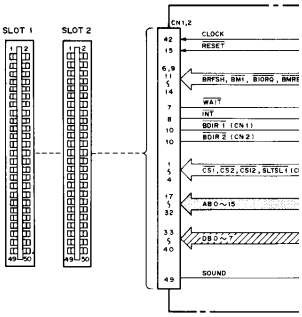

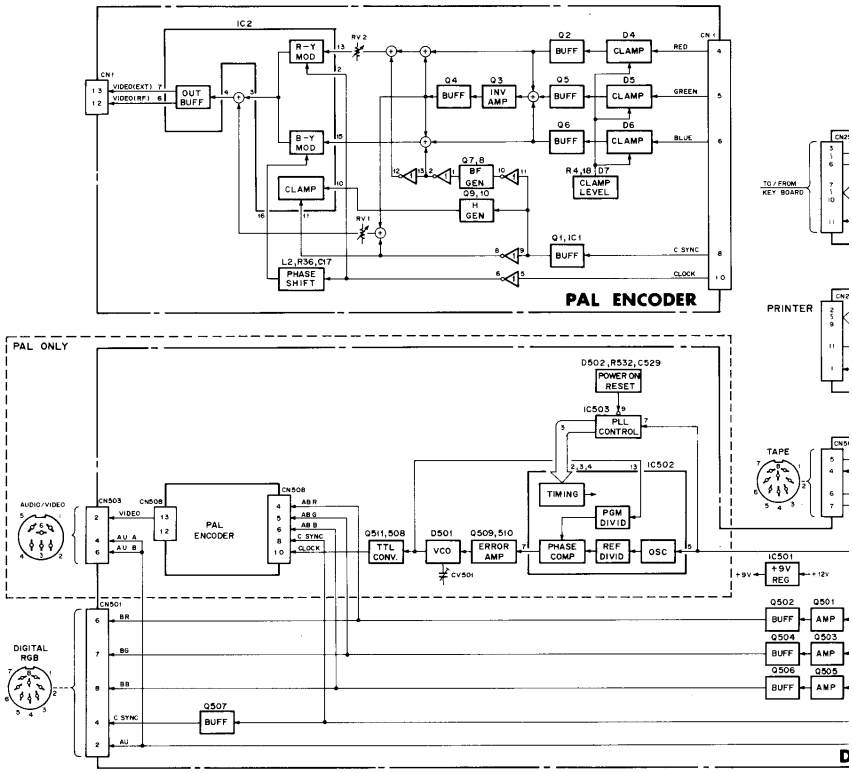

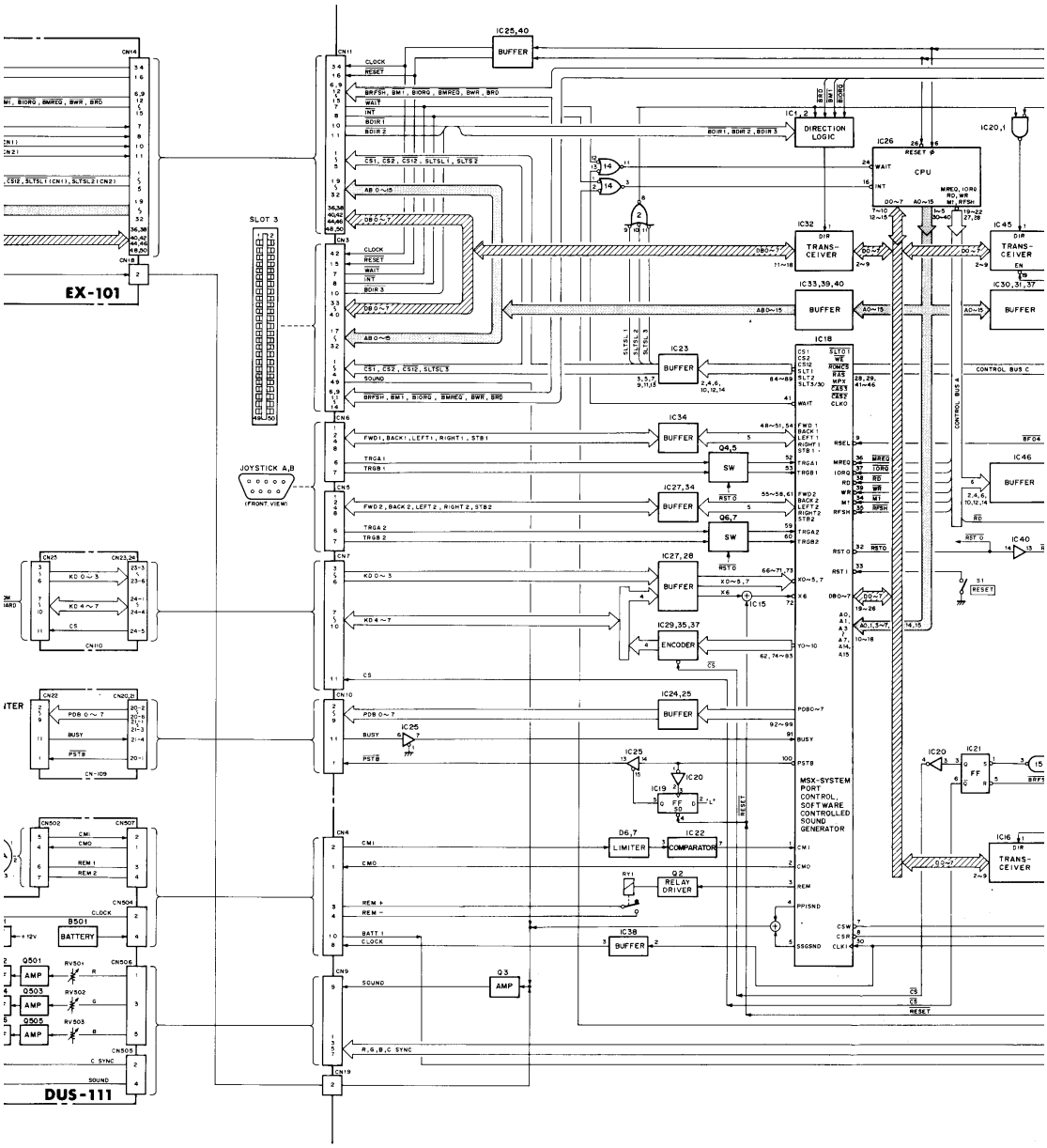
EX-101
DUS-111
SLOT 3
JOYSTICK A,B
(FRONT VIEW)
BUFFER
DIRECTION LOGIC
CPU
TRANS-CEIVER
SW
ENCODER
LIMITER
COMPARATOR
RELAY DRIVER
AMP
BATTERY
MSX-SYSTEM PORT CONTROL, SOFTWARE CONTROLLED SOUND GENERATOR

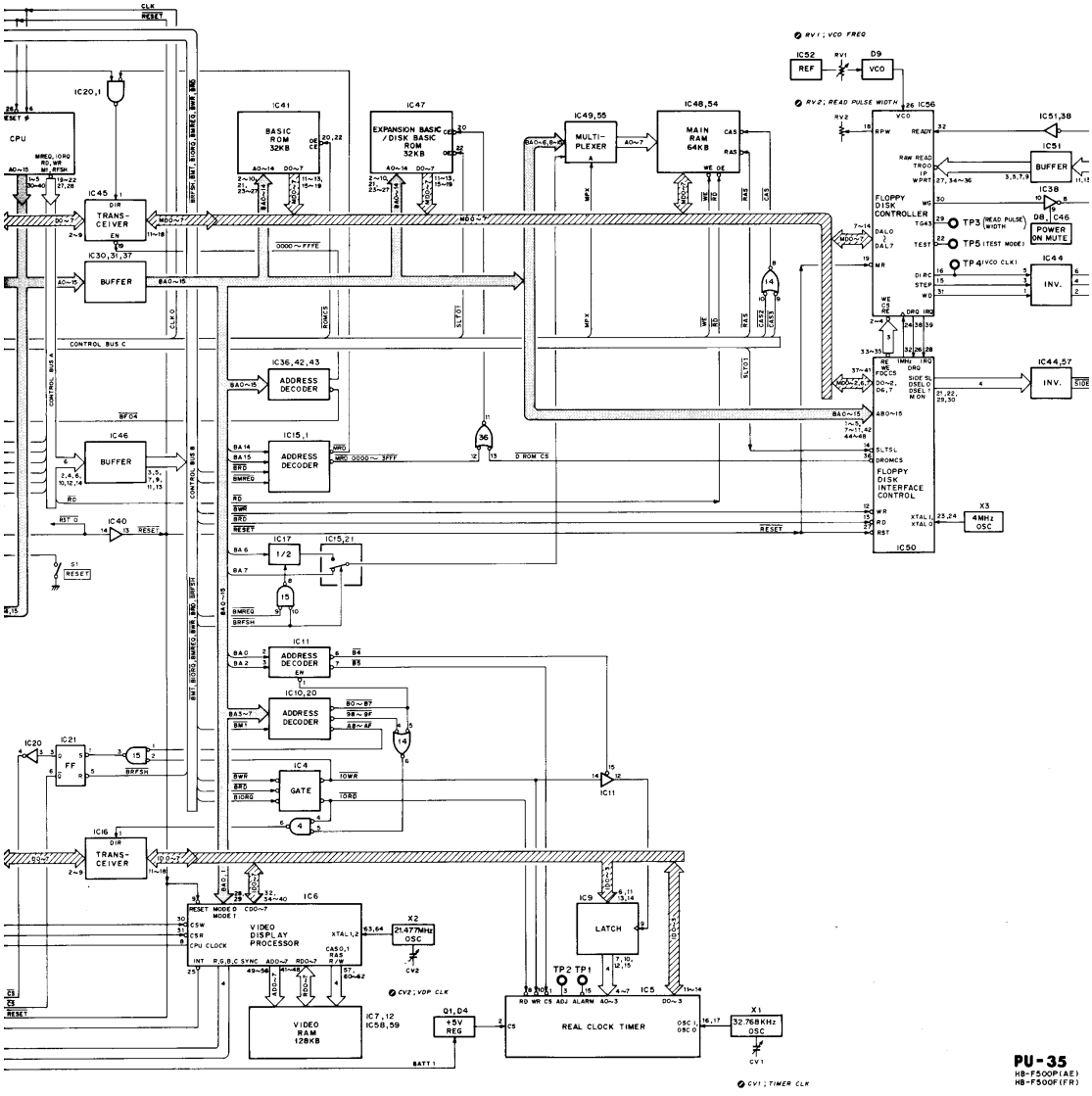

PU-35
HB-F500P(AE)
HB-F500F(FR)

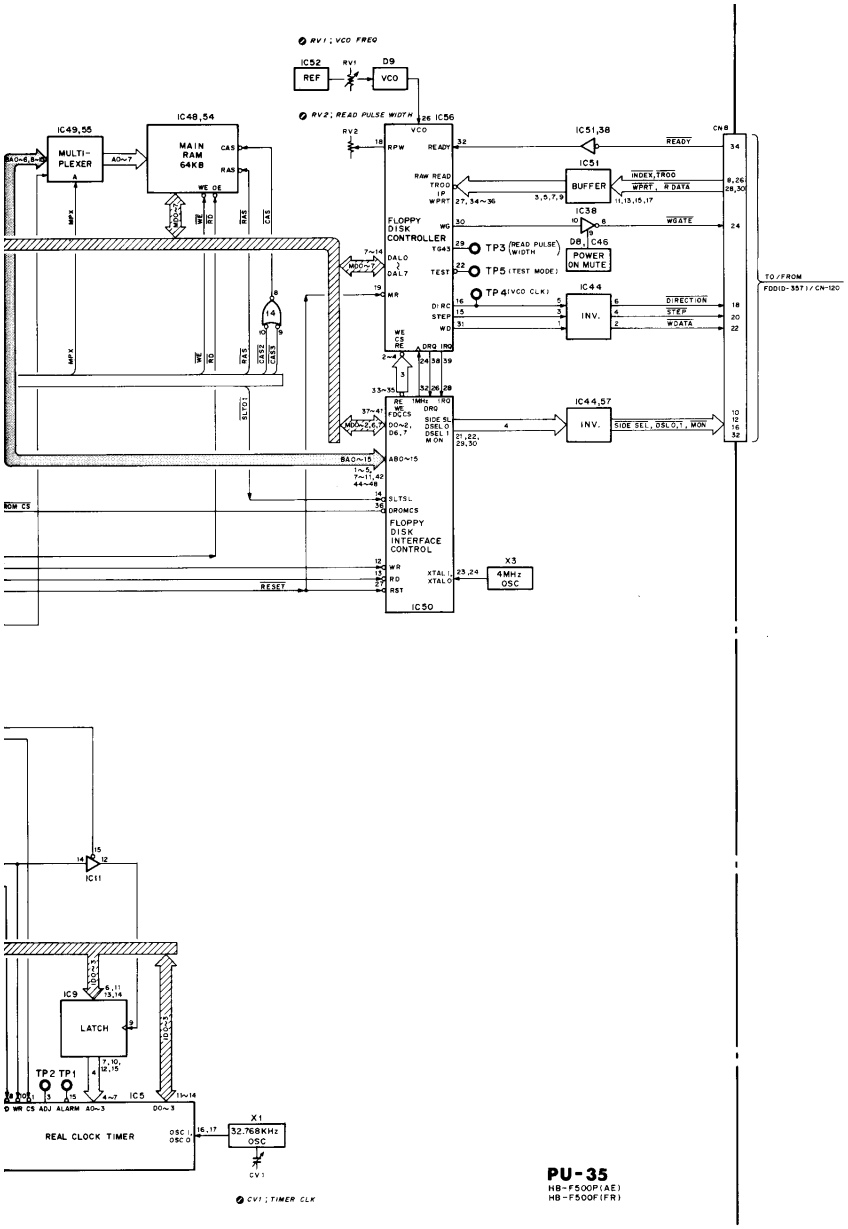

PU-35

HB-F500P(AE)
HB-F500F(FR)

CHAPTER 5
SCHEMATIC DIAGRAM AND PRINTED CIRCUIT BOARD

5-1. SEMICONDUCTOR PIN ASSIGNMENTS

TYPE	PAGE
10E-2	5-11
2SA733	5-11
2SA933	5-11
2SC1740	5-11
2SC2785	5-11
2SC945	5-11
1SS119	5-11
1SS133	5-11
1SS148	5-11
1S1555	5-11
CXD1032Q	5-5
D5FB20	5-11
ERA81-004	5-11
ERB12-??	5-11
GL-3NG5	5-11
HD74LS00P	5-2
HD74LS02P	5-2
HD74LS04P	5-2
HD74LS08P	5-2
HD74LS138P	5-3
HD74LS15P	5-2
HD74LS157P	5-3
HD74LS174P	5-3
HD74LS244P	5-4
HD74LS30P	5-2
HD74LS32P	5-3
HD74LS367AP	5-4
HD74LS38P	5-3
HD74LS74AP	5-3
LH0080A	5-6
MB74LS00	5-2
MB74LS02	5-2
MB74LS04	5-2
MB74LS08	5-2
MB74LS138	5-3
MB74LS139	5-3
MB74LS15	5-2
MB74LS157	5-3
MB74LS174	5-3
MB74LS244	5-4
MB74LS30	5-2
MB74LS32	5-3
MB74LS38	5-3
MB74LS74A	5-3
MB81464-12	5-6
MB83256	5-7
NJM78M??A	5-10
NJM79L??A	5-10
RD5.1EL	5-11
RP5C01	5-7
S-3527	5-8
SI-3122V	5-10
SN74LS00N	5-2
SN74LS02N	5-2
SN74LS04N	5-2
SN74LS06N	5-2
SN74LS08N	5-2
SN74LS138N	5-3
SN74LS139N	5-3
SN74LS15N	5-2
SN74LS157N	5-3
SN74LS174N	5-3
SN74LS244N	5-4
SN74LS245N	5-4
SN74LS30N	5-2
SN74LS32N	5-3
SN74LS348N	5-4
SN74LS367AN	5-4
SN74LS38N	5-3
SN74LS645N	5-5
SN74LS74AN	5-3
SN7406N	5-2
SN7407N	5-2
STR90??	5-11
SVC203	5-11
S2V20	5-11
TL431CP	5-11
TMS2793NL	5-10
TMS4464-15NL	5-6
U05G	5-11
μPC311C	5-11
μPD41254C-12	5-6
μPD41254C-15	5-6
μPD41464C-12	5-6
μPD780C-1	5-6
V9938	5-9
WD2793A-PL02	5-10
Z80A	5-6

HD74LS00P (HITACHI)
MB74LS00 (FUJITSU)
SN74LS00N (TI)
TTL 2-INPUT POSITIVE-NAND GATE
— TOP VIEW —

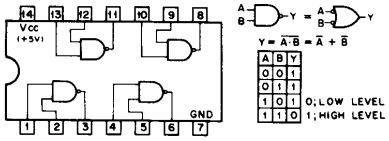

HD74LS02P (HITACHI)
MB74LS02 (FUJITSU)
SN74LS02N (TI)
TTL 2-INPUT POSITIVE-NOR GATE
— TOP VIEW —

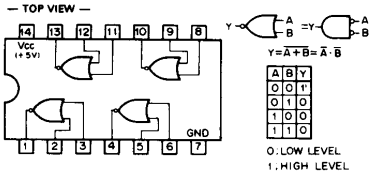

HD74LS04P (HITACHI)
MB74LS04 (FUJITSU)
SN74LS04N (TI)
TTL INVERTER
— TOP VIEW —

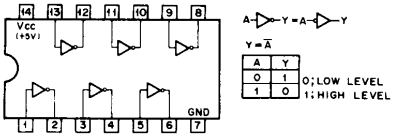

SN7406N (TI)
SN74LS06N
TTL INVERTER BUFFER/DRIVER WITH OPEN-COLLECTOR
— TOP VIEW —

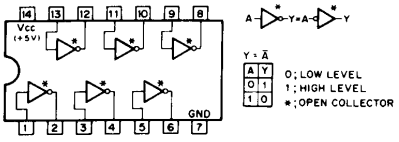

SN7407N (TI)
TTL BUFFER/DRIVER WITH OPEN-COLLECTOR
— TOP VIEW —

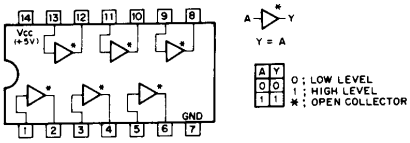

HD74LS08P (HITACHI)
MB74LS08 (FUJITSU)
SN74LS08N (TI)
TTL 2-INPUT POSITIVE-AND GATE
— TOP VIEW —

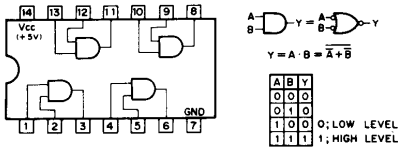

HD74LS15P (HITACHI)
MB74LS15 (FUJITSU)
SN74LS15N (TI)
TTL 3-INPUT POSITIVE-AND GATE WITH OPEN-COLLECTOR
— TOP VIEW —

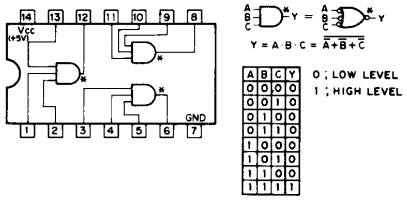

HD74LS30P (HITACHI)
MB74LS30 (FUJITSU)
SN74LS30N (TI)
TTL 8-INPUT POSITIVE-NAND GATE
— TOP VIEW —

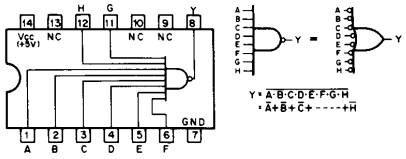

HD74LS32P (HITACHI)
MB74LS32 (FUJITSU)
SN74LS32N (TI)
TTL 2-INPUT POSITIVE-OR GATE
— TOP VIEW —

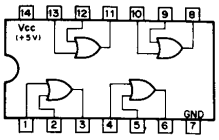

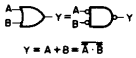

$Y = A + B = \overline{\overline{A} \cdot \overline{B}}$

A	B	Y
0	0	0
0	1	1
1	0	1
1	1	1

0:LOW LEVEL
1:HIGH LEVEL

HD74LS38P (HITACHI)
MB74LS38 (FUJITSU)
SN74LS38N (TI)
TTL 2-INPUT POSITIVE-NAND GATE BUFFER
WITH OPEN-COLLECTOR
— TOP VIEW —

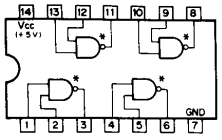

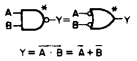

$Y = \overline{A \cdot B} = \overline{A} + \overline{B}$

A	B	Y
0	0	1
0	1	1
1	0	1
1	1	0

0 ; LOW LEVEL
1 ; HIGH LEVEL
✱ ; OPEN COLLECTOR

HD74LS74AP (HITACHI)
MB74LS74A (FUJITSU)
SN74LS74AN (TI)
TTL D-TYPE FLIP FLOP WITH DIRECT SET/RESET
— TOP VIEW —

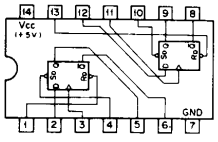

INPUTS				OUTPUTS	
$\overline{Sd}$	$\overline{Rd}$	CK	D	Qn+1	$\overline{Qn+1}$
0	1	X	X	1	0
1	0	X	X	0	1
0	0	X	X	1✱	1✱
1	1	↑	1	1	0
1	1	↑	0	0	1
1	1	0	X	Qn	$\overline{Qn}$

0;LOW LEVEL
1;HIGH LEVEL
X;DON'T CARE
✱;NONSTABLE

HD74LS138P (HITACHI)
MB74LS138 (FUJITSU)
SN74LS138N (TI)
TTL 3-TO-8-LINE DECODER/DEMULTIPLEXER
— TOP VIEW —

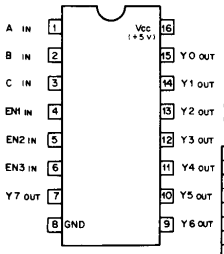

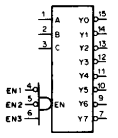

IN PUTS				OUTPUTS							
EN	C	B	A	Y7	Y6	Y5	Y4	Y3	Y2	Y1	Y0
0	X	X	X	1	1	1	1	1	1	1	1
1	0	0	0	1	1	1	1	1	1	1	0
1	0	0	1	1	1	1	1	1	1	0	1
1	0	1	0	1	1	1	1	1	0	1	1
1	0	1	1	1	1	1	1	0	1	1	1
1	1	0	0	1	1	1	0	1	1	1	1
1	1	0	1	1	1	0	1	1	1	1	1
1	1	1	0	1	0	1	1	1	1	1	1
1	1	1	1	0	1	1	1	1	1	1	1

$EN = \overline{EN1} \cdot \overline{EN2} \cdot EN3$

0 ; LOW LEVEL
1 ; HIGH LEVEL
X ; DON'T CARE

MB74LS139 (FUJITSU)
SN74LS139N (TI)
TTL 2-TO-4-LINE DECODER/DEMULTIPLEXER
— TOP VIEW —

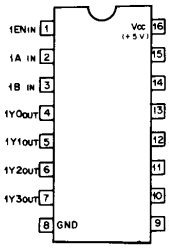

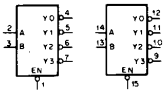

IN PUTS			OUTPUTS			
EN	B	A	Y3	Y2	Y1	Y0
0	0	0	1	1	1	0
0	0	1	1	1	0	1
0	1	0	1	0	1	1
0	1	1	0	1	1	1
1	X	X	1	1	1	1

0 ; LOW LEVEL
1 ; HIGH LEVEL
X ; DON'T CARE

HD74LS157P (HITACHI)
MB74LS157 (FUJITSU)
SN74LS157N (TI)
TTL 2-LINE-TO-1-LINE DATA SELECTOR/MULTIPLEXER
— TOP VIEW —

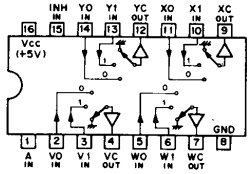

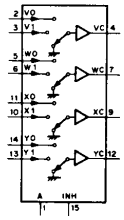

CONT. IN		ON CHANNEL
INH	A	
0	0	0
0	1	1
1	X	GND

0;LOW LEVEL
1;HIGH LEVEL
X;DON'T CARE

HD74LS174P (HITACHI)
MB74LS174 (FUJITSU)
SN74LS174N (TI)
TTL D-TYPE FLIP-FLOP WITH DIRECT RESET
— TOP VIEW —

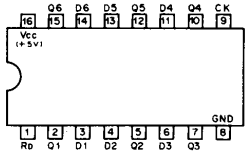

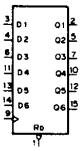

EACH FLIP-FLOP

INPUTS			OUT
Rd	CK	D	Q
0	X	X	0
1	↓	0	0
1	↓	1	1
1	0	X	Q0

0;LOW LEVEL
1;HIGH LEVEL
X;DON'T CARE

SN74LS245N (TI)
TTL BILATERAL SCHMITT TRIGGER BUS TRANSCEIVERS WITH 3-STATE OUTPUT
— TOP VIEW —

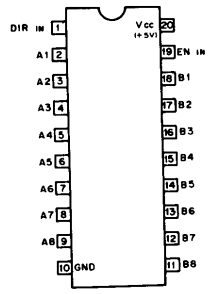

EN	DIR	OPERATION
0	0	B to A
0	1	A to B
1	X	HI-Z

0 ; LOW LEVEL
1 ; HIGH LEVEL
X ; DON'T CARE
HI-Z ; HIGH IMPEDANCE

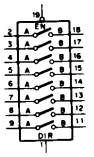

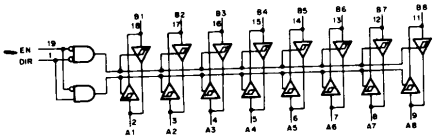

SN74LS348N (TI)
TTL 8-LINE-TO 3-LINE PRIORITY ENCODERS WITH 3-STATE OUTPUTS
— TOP VIEW —

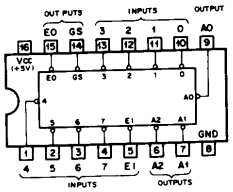

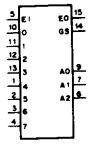

INPUTS								OUTPUTS				
EI	0	1	2	3	4	5	6	7	A2	A1	AO	GS	EO
1	X	X	X	X	X	X	X	X	Z	Z	Z	1	1
0	1	1	1	1	1	1	1	1	Z	Z	Z	1	0
0	X	X	X	X	X	X	X	0	0	0	0	0	1
0	X	X	X	X	X	X	0	1	0	0	1	0	1
0	X	X	X	X	X	0	1	1	0	1	0	0	1
0	X	X	X	X	0	1	1	1	0	1	1	0	1
0	X	X	X	0	1	1	1	1	1	0	0	0	1
0	X	X	0	1	1	1	1	1	1	0	1	0	1
0	X	0	1	1	1	1	1	1	1	1	0	0	1
0	0	1	1	1	1	1	1	1	1	1	1	0	1

0 ; LOW LEVEL
1 ; HIGH LEVEL
X ; DON'T CARE
Z ; HIGH IMPEDANCE

HD74LS244P (HITACHI)
MB74LS244 (FUJITSU)
SN74LS244N (TI)
TTL 3-STATE SCHMITT TRIGGER BUFFER/DRIVER
— TOP VIEW —

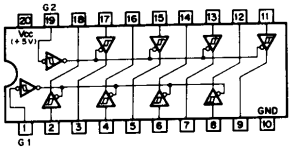

G	A	Y
0	0	0
0	1	1
1	X	HI-Z

0 ; LOW LEVEL
1 ; HIGH LEVEL
X ; DON'T CARE
HI-Z ; HIGH IMPEDANCE

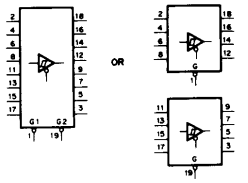

HD74LS367AP (HITACHI)
SN74LS367AN (TI)
TTL BUS DRIVER WITH 3-STATE OUTPUTS
— TOP VIEW —

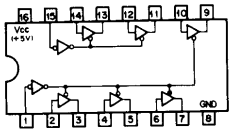

G	A	Y
0	0	0
0	1	1
1	X	HI-Z

0 ; LOW LEVEL
1 ; HIGH LEVEL
X ; DONJ CARE
HI-Z ; HIGH IMPEDANCE

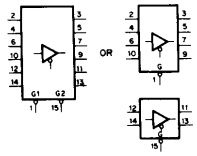

SN74LS645N (TI)
TTL BILATERAL SCHMITT TRIGGER BUS TRANSCEIVERS WITH 3-STATE OUTPUT
— TOP VIEW —

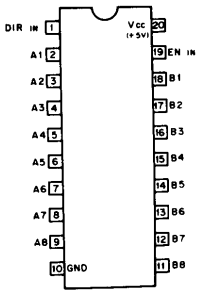

EN	DIR	OPERATION
0	0	B to A
0	1	A to B
1	X	HI-Z

0 ; LOW LEVEL
1 ; HIGH LEVEL
X ; DON'T CARE
HI-Z ; HIGH IMPEDANCE

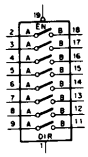

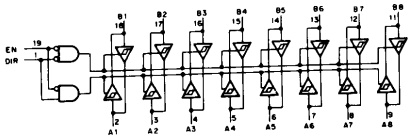

CXD1032Q (SONY)
C-MOS MSX FLOPPY DISK INTERFACE CONTROLLER
— TOP VIEW —

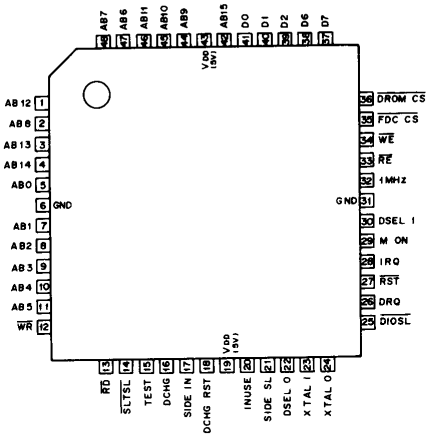

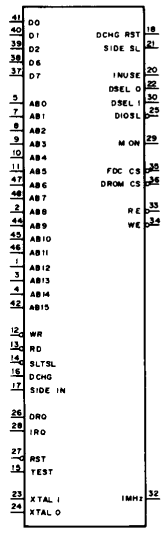

1MHZ	; 1MHZ CLOCK OUT
AB0~AB15	; ADDRESS BUS
D0,1,2,6,7	; DATA BUS
DCHG	; DISK CHANGE
DCHG RST	; DISK CHANGE RESET
DIOSL	; DISK I/O SELECT
DROM CS	; DISK ROM CHIP SELECT
DRQ	; DATA REQUEST
DSEL0,1	; DRIVE SELECT 0,1
FDC CS	; FDC CHIP SELECT
INUSE	; INUSE
IRQ	; INTERRUPT REQUEST
M ON	; MOTOR ON
RD	; READ
RE	; READ ENABLE
RST	; RESET
SIDE IN	; SIDE IN
SIDE SL	; SIDE SELECT
SLTSL	; SLOT SELECT
TEST	; TEST
WE	; WRITE ENABLE
WR	; WRITE
XTAL I/O	; CRYSTAL IN/OUT

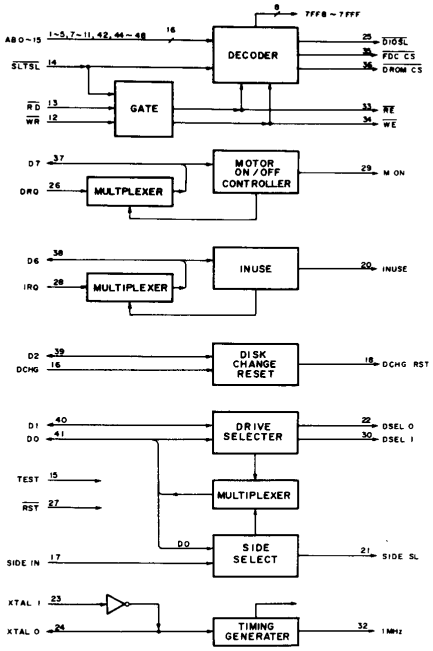

LH0080A (SHARP)
uPD780C-1 (NEC)
Z80A (ZILOG)
N-MOS 8-BIT MICROPROCESSOR
— TOP VIEW —

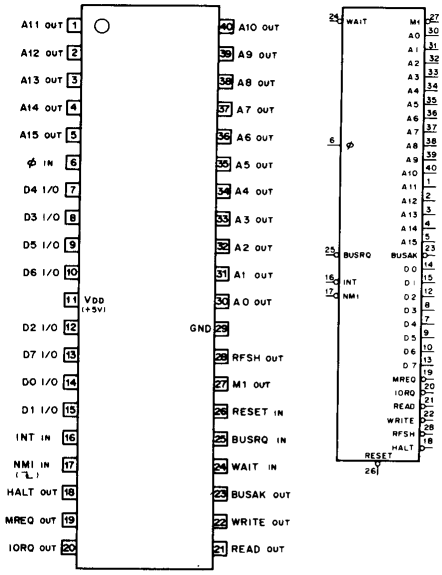

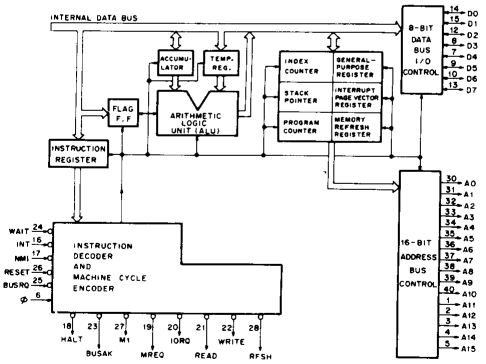

TEMP. REG. ; TEMPORARY REGISTER

φ ; CLOCK
A0-A15 ; 3-STATE ADDRESS OUTPUT
BUSAK ; BUS ACKNOWLEDGE
BUSRQ ; BUS REQUEST
D0-D7 ; 3-STATE DATA INPUT/OUTPUT
HALT ; HALT STATE
INT ; INTERRUPT REQUEST
IORQ ; 3-STATE I/O REQUEST
M1 ; MACHINE CYCLE 1
MREQ ; 3-STATE MEMORY REQUEST
NMI ; NON-MASKABLE INTERRUPT (DOWN EDGE TRIGGER)
READ ; 3-STATE MEMORY READ
RFSH ; REFRESH
WRITE ; 3-STATE MEMORY WRITE

MB81464-12 (FUJITSU) (ACCESS TIME = 120nS)
TMS4464-15NL (TI) (ACCESS TIME = 150nS)
uPD41254C-12 (NEC) (ACCESS TIME = 120nS)
uPD41254C-15 (NEC) (ACCESS TIME = 150nS)
uPD41464C-12 (NEC) (ACCESS TIME = 120nS)
N-MOS 65536-WORD BY 4-BIT DYNAMIC RAM
— TOP VIEW —

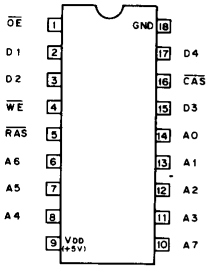

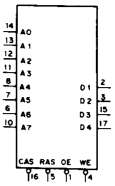

A0~A7 ; ADDRESS INPUT
CAS ; COLUMN ADDRESS STROBE
D1~D4 ; DATA IN/OUT
OE ; OUTPUT ENABLE
RAS ; ROW ADDRESS STROBE
WE ; WRITE ENABLE

MODE	CONTROL		DATA
	WE	OE	D1~D4
—	0	0	X
WRITE	0	1	DATA IN
READ	1	0	DATA OUT
—	1	1	HI-Z

0 ; LOW LEVEL
1 ; HIGH LEVEL
X ; DON'T CARE
HI-Z ; HIGH IMPEDANCE

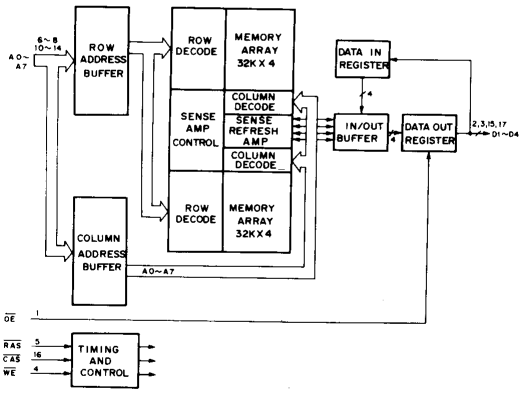

MB83256 (FUJITSU)
C-MOS MASK ROM
— TOP VIEW —

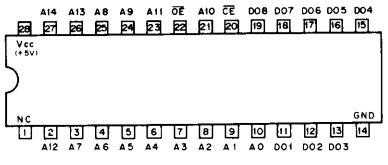

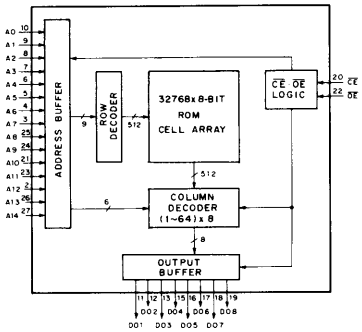

$\overline{CE}$	$\overline{OE}$	DATA OUTPUT
1	X	HIGH-Z
0	1	HIGH-Z
0	0	OUTPUT DATA

1 , HIGH LEVEL
0 , LOW LEVEL
X , DON'T CARE
HIGH-Z , HIGH IMPEDANCE

RP5C01 (RICOH)
C-MOS REAL TIME CLOCK
— TOP VIEW —

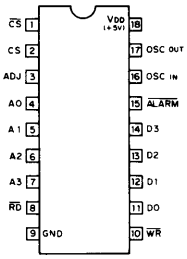

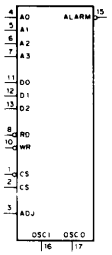

A0~A3, ADDRESS BUS
ADJ, ADJUSTMENT IN
ALARM, ALARM OUT
CS, $\overline{CS}$, CHIP SELECT
D0~D3, DATA BUS
OSC IN/OUT, CLOCK IN/OUT
RD, READ IN
WR, WRITE IN

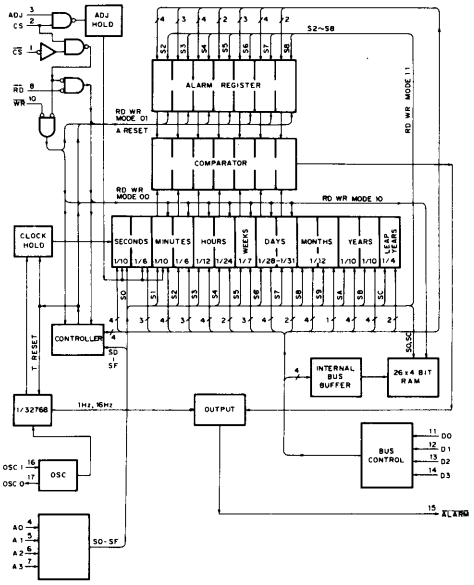

S-3527 (YAMAHA)
C MOS MSX PORT CONTROLLER AND SOFTWARE CONTROLLED SOUND GENERATOR
— TOP VIEW —

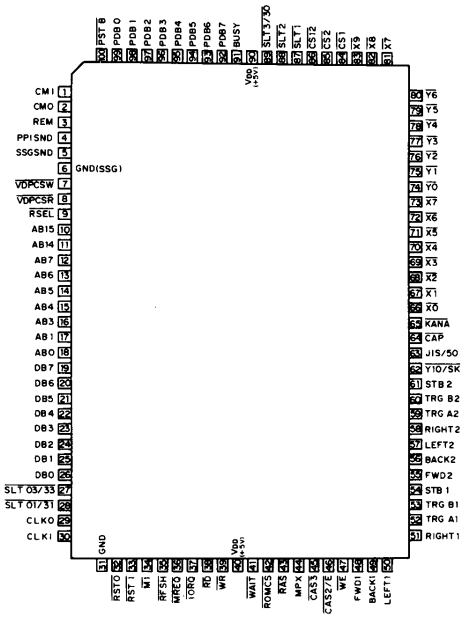

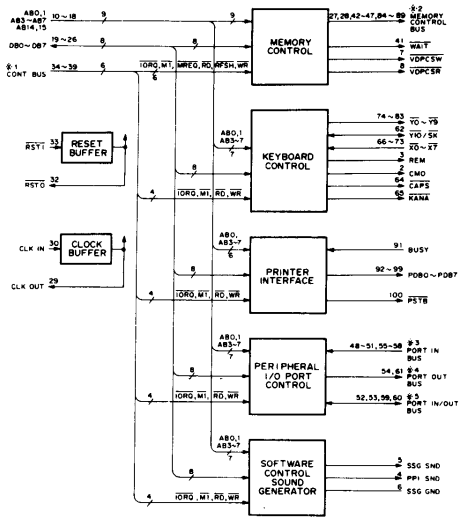

※1 CONT BUS; $\overline{IORQ}$, $\overline{M1}$, $\overline{MREQ}$, $\overline{RD}$, $\overline{RFSH}$, $\overline{WR}$
※2 MEMORY CONTROL BUS; $\overline{CAS2/E}$, $\overline{CAS3}$, $\overline{CS1}$, $\overline{CS2}$, $\overline{CS12}$, MPX, $\overline{RAS}$, $\overline{ROMCS}$
$\overline{SLT1}$, $\overline{SLT2}$, $\overline{SLT01/31}$, $\overline{SLOT03/33}$, $\overline{SLT3/30}$
※3 PORT IN BUS; BACK1, BACK2, FWD1, FWD2, LEFT1, LEFT2, RIGHT1, RIGHT2,
※4 PORT OUT BUS; STB1, STB2
※5 PORT IN/OUT BUS; TRGA1, TRGA2, TRGB1, TRGB2

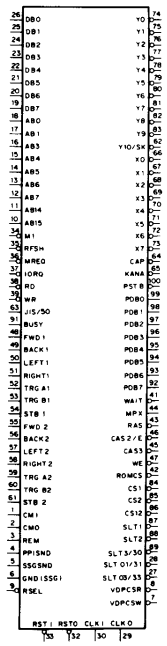

AB0, 1, 3~7, 14, 15	; ADDRESS BUS
BACK 1, 2	; BACK SIGNAL 1, 2
BUSY	; PRINTER BUSY SIGNAL
CAP	; CAP LED SIGNAL
CAS2/E	; RAM COLUMN ADDRESS STROBE
CAS 3	; RAM COLUMN ADDRESS STROBE
CLK 1, 0	; CLOCK INPUT, OUTPUT
CM I, 0	; CASSETTE SIGNAL IN, OUT
CS1, 2, 12	; ROM CHIP SELECT 1, 2, 12
DB0~DB7	; DATA BUS
FWD 1, 2	; FWD SIGNAL 1, 2
IORQ	; I/O REQUEST
JIS/50	; KEYBOARD ASSIGNMENT CONTROL JIS/50
KANA	; KANA LED SIGNAL
LEFT 1, 2	; LEFT SIGNAL 1, 2
M1	; MACHINE CYCLE 1
MPX	; D-RAM MULTIPLEX SIGNAL
MREQ	; MEMORY REQUEST
PDB0~7	; PRINTER DATA BUS
PPI SND	; PPI SOUND
PSTB	; PRINTER STROBE SIGNAL
RAS	; DRAM ROW ADDRESS STROBE
RD	; READ SIGNAL
REM	; CASSETTE REMOTE SIGNAL
RFSH	; REFRESH
RIGHT 1, 2	; RIGHT SIGNAL 1, 2
RSEL	; EXPANSION SELECT REGISTOR CONTROL SIGNAL
RST 1, 0	; RESET IN, OUT
SLT 1	; SLOT SELECT 1
SLT 2	; SLOT SELECT 2
SLT 3/30	; SLOT SELECT 3/30
SSG SND	; ANALOG SOUND
STB 1, 2	; STROBE SIGNAL 1, 2
GND (SSG)	; GROUND (SSG)
TRG A 1, 2	; TRIGGER A1, 2
TRG B 1, 2	; TRIGGER B1, 2
VDP CSR	; VDP READ STROBE
VDP CSW	; VDP WRITE STROBE
WAIT	; WAIT REQUEST SIGNAL
WE	; DRAM WRITE SIGNAL
WR	; WR SIGNAL
X0~X7	; KEYBOARD RETURN SIGNAL
Y0~Y9	; KEYBOARD SCAN SIGNAL
Y10/SK	; KEYBOARD SCAN SIGNAL/SERIAL KEY IN

V9938 (YAMAHA)
C MOS VIDEO DISPLAY PROCESSOR
— TOP VIEW —

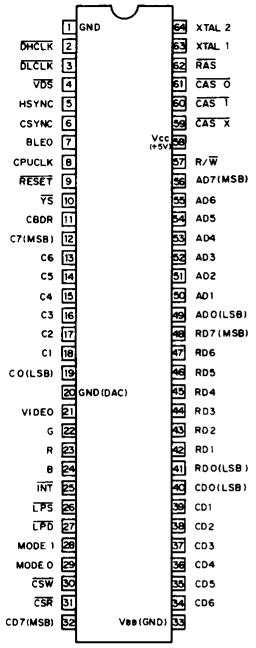

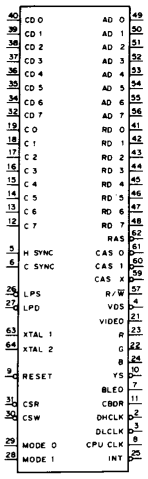

AD0 ~ AD7	; VRAM ADDRESS BUS
B	; BLUE SIGNAL
BLEO	; BLANKING
C0 ~ C7	; COLOR BUS
CAS 0	; VRAM COLUMN ADDRESS STOROBE (EXPANSION VRAM)
CAS 1	; VRAM COLUMN ADDRESS STOROBE (EXPANSION VRAM)
CAS X	; VRAM COLUMN ADDRESS STOROBE (EXPANSION VRAM)
CBDR	; COLOR BUS DIRECTION
CD 0 ~ CD7	; CPU DATA BUS
CPU CLK	; CPU CLOCK
CSR	; CPU READ STOROBE
CSW	; CPU WRITE STOROBE
CSYNC	; COMPOSITE SYNC
DHCLK	; DOT CLOCK 10.74MHz
DLCLK	; DOT CLOCK 5.37 MHz
G	; GREEN SIGNAL
H SYNC	; HORIZONTAL SYNC
INT	; CPU INTERRUPT OUTPUT
LPD	; LIGHT PEN SW INPUT
LPS	; LIGHT PEN RAY DETECT
MODE 0	; CPU INTERFACE MODE SELECT 0
MODE 1	; CPU INTERFACE MODE SELECT 1
R	; RED SIGNAL
RAS	; VRAM ROW ADDRESS STROBE
RD 0 ~ RD7	; VRAM READ DATA BUS
RESET	; RESET IN
VDS	; VRAM DATA SELECT
VIDEO	; COMPOSITE VIDEO OUTPUT
R/W	; VRAM READ / WRITE
XTAL 1, 2	; CRYSTAL INPUT
YS	; SWITCHING

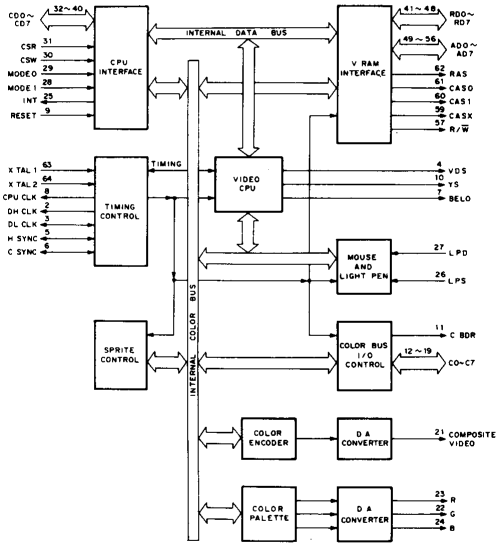

TMS2793NL (TI)
WD2793A-PL02 (WESTERN DIGITAL)
N CHANNEL E/D MOS FLOPPY DISK FORMATTER/CONTROLLER
— TOP VIEW —

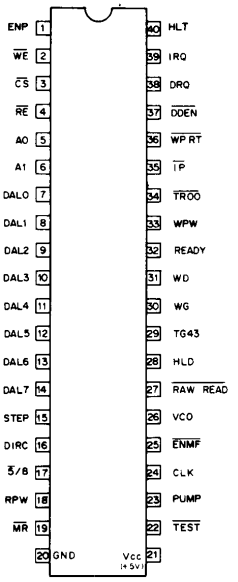

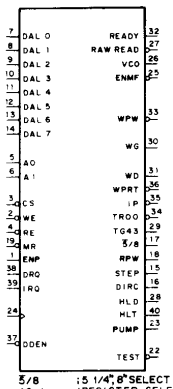

5/8	;5 1/4", 8" SELECT
A0, 1	;REGISTER SELECT LINES
CLK	;CLOCK
CS	;CHIP SELECT
DAL0-7	;DATA ACCESS LINES
DDEN	;DOUBLE DENSITY
DIRC	;DIRECTION
DRQ	;DATA REQUEST
ENMF	;ENABLE MINI-FLOPPY
ENP	;ENABLE PRECOMP
HLD	; HEAD LOAD
HLT	; HEAD LOAD TIMING
IP	; INDEX PULSE
IRQ	; INTERRUPT REQUEST
MR	; MASTER RESET
RE	; READ ENABLE
RPW	; READ PULSE WIDTH
TG43	; TRACK GREATER THAN 43
TROO	; TRACK 00
VCO	; VOLTAGE-CONTROLLED OSC
WD	; WRITE DATA
WE	; WRITE ENABLE
WG	; WRITE GATE
WPRT	; WRITE PROTECT
WPW	; WRITE PRECOMP WIDTH

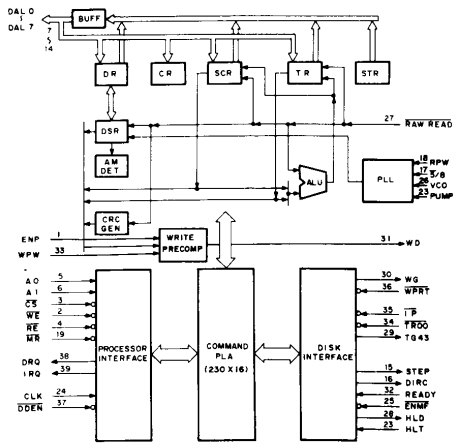

CR	;COMMAND REGISTER
DR	;DATA REGISTER
DSR	;DATA SHIFT REGISTER
SCR	;SECTOR REGISTER
TR	;TRACK REGISTER
STR	;STATUS REGISTER

REGISTER SELECTION

CS	A1	A0	RE = 0	WE = 0
1	X	X	NON SELECT	DAL=HI-Z
0	0	0	STR	CR
0	0	1	TR	TR
0	1	0	SCR	SCR
0	1	1	DR	DR

0 ; LOW LEVEL
1 ; HIGH LEVEL
X ; DON'T CARE
HI-Z ; HIGH IMPEDANCE

NJM78M ? ?A (JRC)
VOLTAGE REGULATOR
— FRONT VIEW —

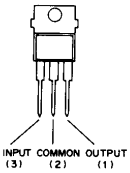

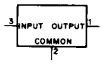

5V	NJM78M05A
6V	NJM78M06A
8V	NJM78M08A
9V	NJM78M09A
12V	NJM78M12A
15V	NJM78M15A
18V	NJM78M18A
20V	NJM78M20A
24V	NJM78M24A

NJM79L ? ?A (JRC)
NEGATIVE VOLTAGE REGULATOR (100mA)
— FRONT VIEW —

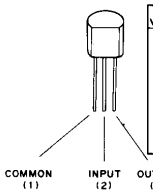

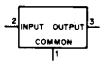

OUTPUT VOLTAGE	??
- 3V	03
- 5V	05
- 6V	06
- 8V	08
- 9V	09
-12V	12
-15V	15
-18V	18
-24V	24

SI-3122V (SANKEN)
POSITIVE VOLTAGE REGULATOR (2A)

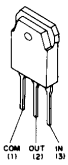

5V	SI-3052V
12V	SI-3122V

STR90 ? ? (SANKEN)
POSITIVE VOLTAGE REGULATOR (4A)
— OBLIQUE VIEW —

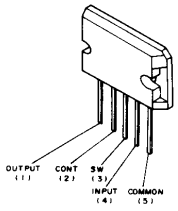

OUTPUT VOLTAGE	??
5 V	05
12V	12

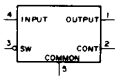

CONT ; OUTPUT CONTROL
SW ; OUTPUT SWITCHING

SW	OUTPUT
0	ON
1	OFF

0 ; MAX 0.6V
1 ; MIN 2V

TL431CP (TI)
ADJUSTABLE PRECISION SHUNT REGULATOR
— TOP VIEW —

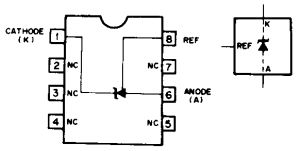

uPC311C (NEC)
VOLTAGE COMPARATOR
— TOP VIEW —

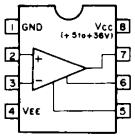

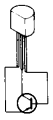

2SA733
2SA933

2SC1740
2SC945

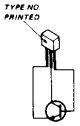

2SC2785

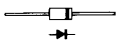

10E-2
1S1555
1SS119
1SS133
1SS148
ERB12-? ?
S2V20

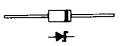

ERA81-004

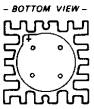

D5FB20

GL-3NG5 ; GREEN

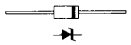

RD ? ?EL

SVC203

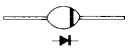

U05G

5-2. FRAME

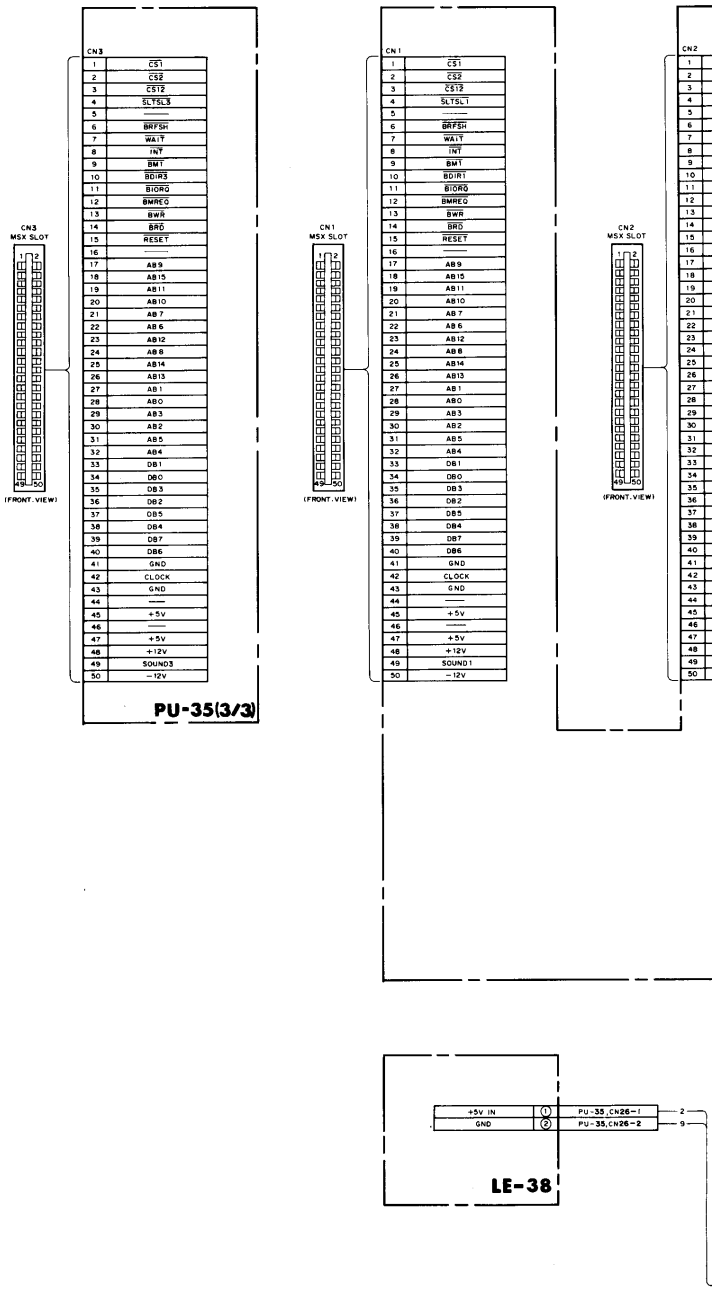
CN3
CN3 MSX SLOT
(FRONT VIEW)
PU-35(3/3)
CN1
CN1 MSX SLOT
(FRONT VIEW)
CN2
CN2 MSX SLOT
(FRONT VIEW)
+5V IN
GND
PU-35,CN26-1
PU-35,CN26-2
LE-38

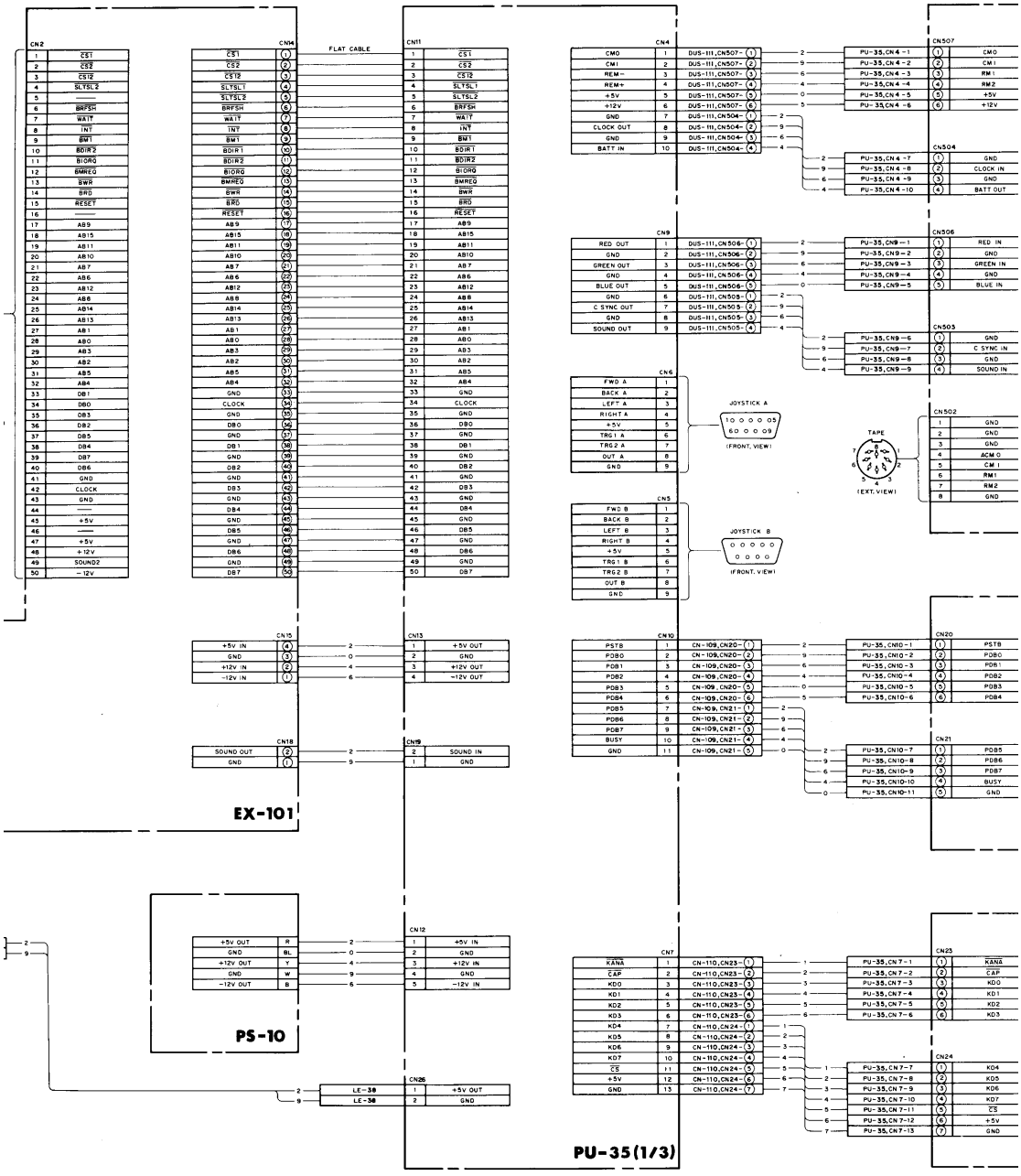
EX-101
PS-10
PU-35(1/3)
FLAT CABLE
JOYSTICK A
JOYSTICK B
TAPE
(FRONT. VIEW)
(EXT. VIEW)

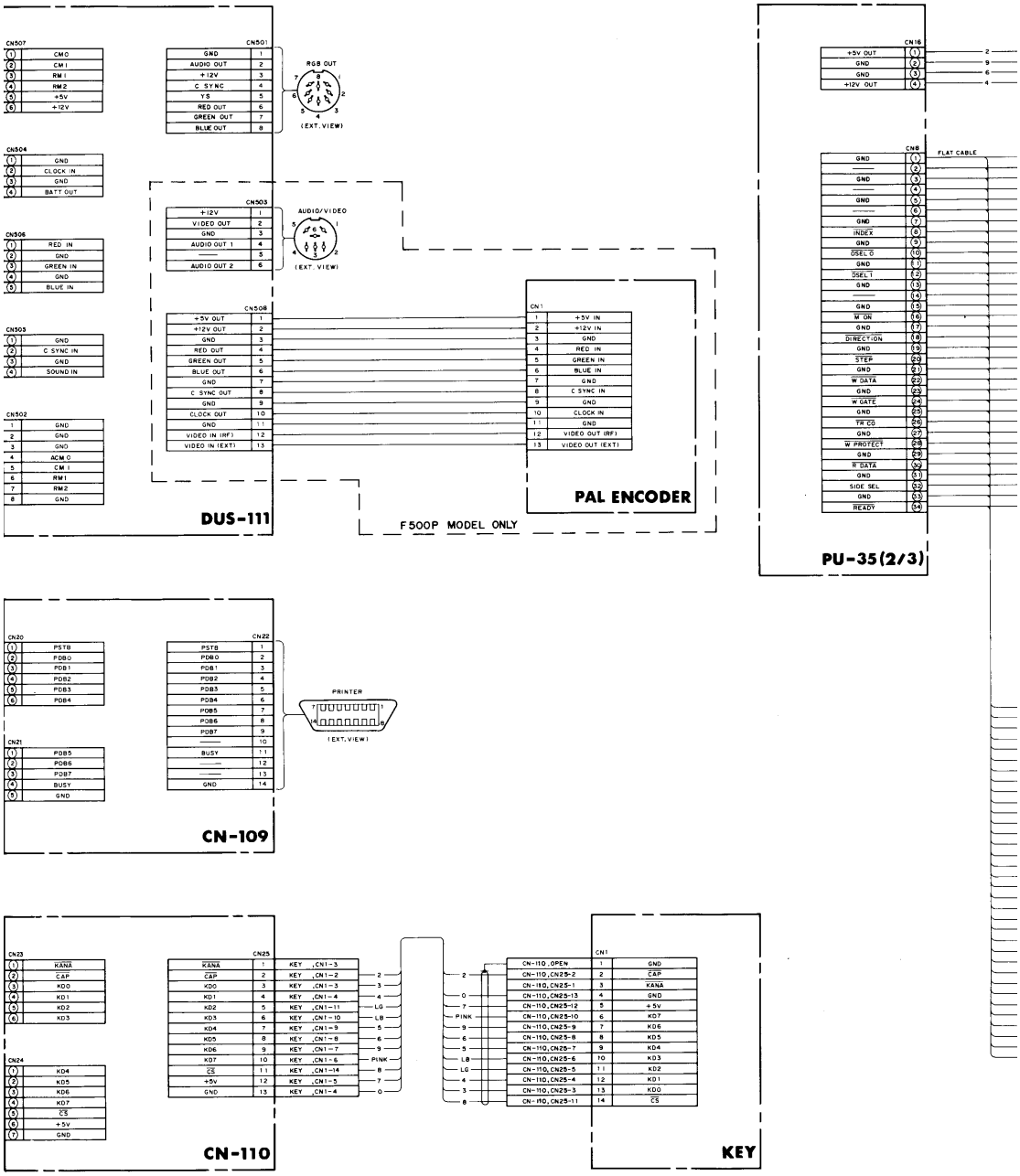
DUS-111
PAL ENCODER
F500P MODEL ONLY
PU-35(2/3)
CN-109
CN-110
KEY
PRINTER
AUDIO/VIDEO
RGB OUT
FLAT CABLE

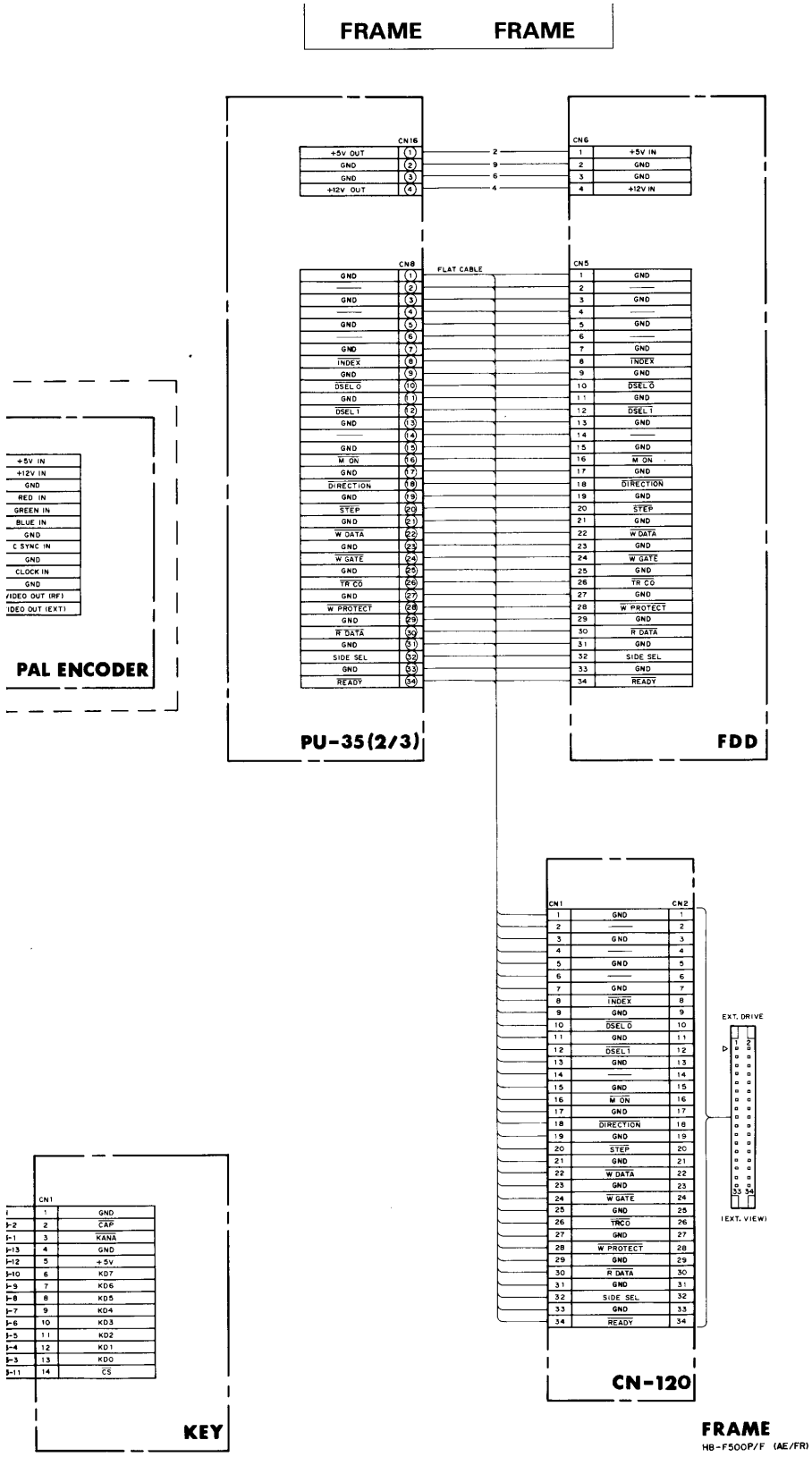
FRAME
FRAME
CN16
+5V OUT
GND
GND
+12V OUT
CN6
+5V IN
GND
GND
+12V IN
CN8
FLAT CABLE
CN5
PU-35(2/3)
FDD
PAL ENCODER
+5V IN
+12V IN
GND
RED IN
GREEN IN
BLUE IN
GND
C SYNC IN
GND
CLOCK IN
GND
VIDEO OUT (RF)
VIDEO OUT (EXT)
CN1
CN2
EXT. DRIVE
(EXT. VIEW)
CN-120
CN1
GND
CAP
KANA
GND
+5V
KD7
KD6
KD5
KD4
KD3
KD2
KD1
KD0
CS
KEY
FRAME
HB-F500P/F (AE/FR)

5-3. PU-35 BOARD

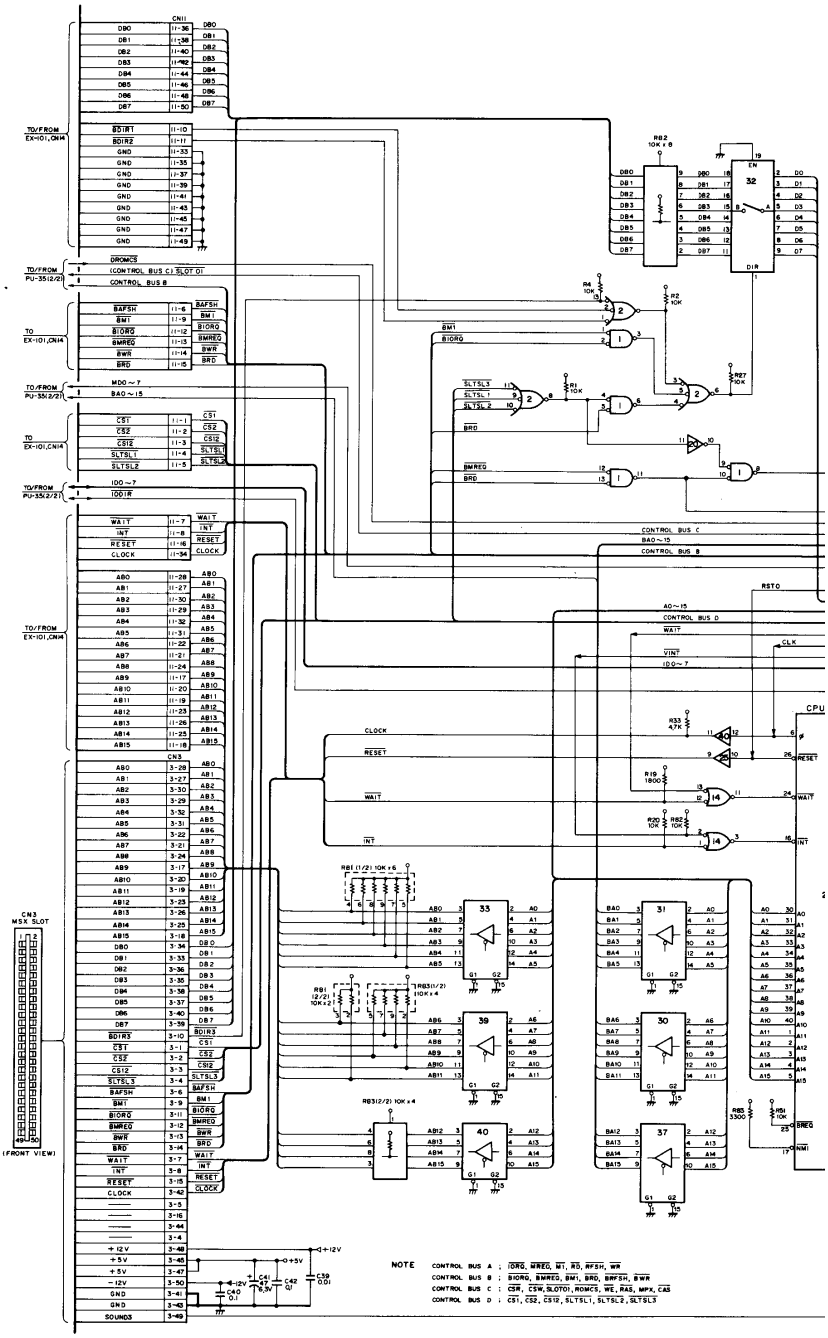

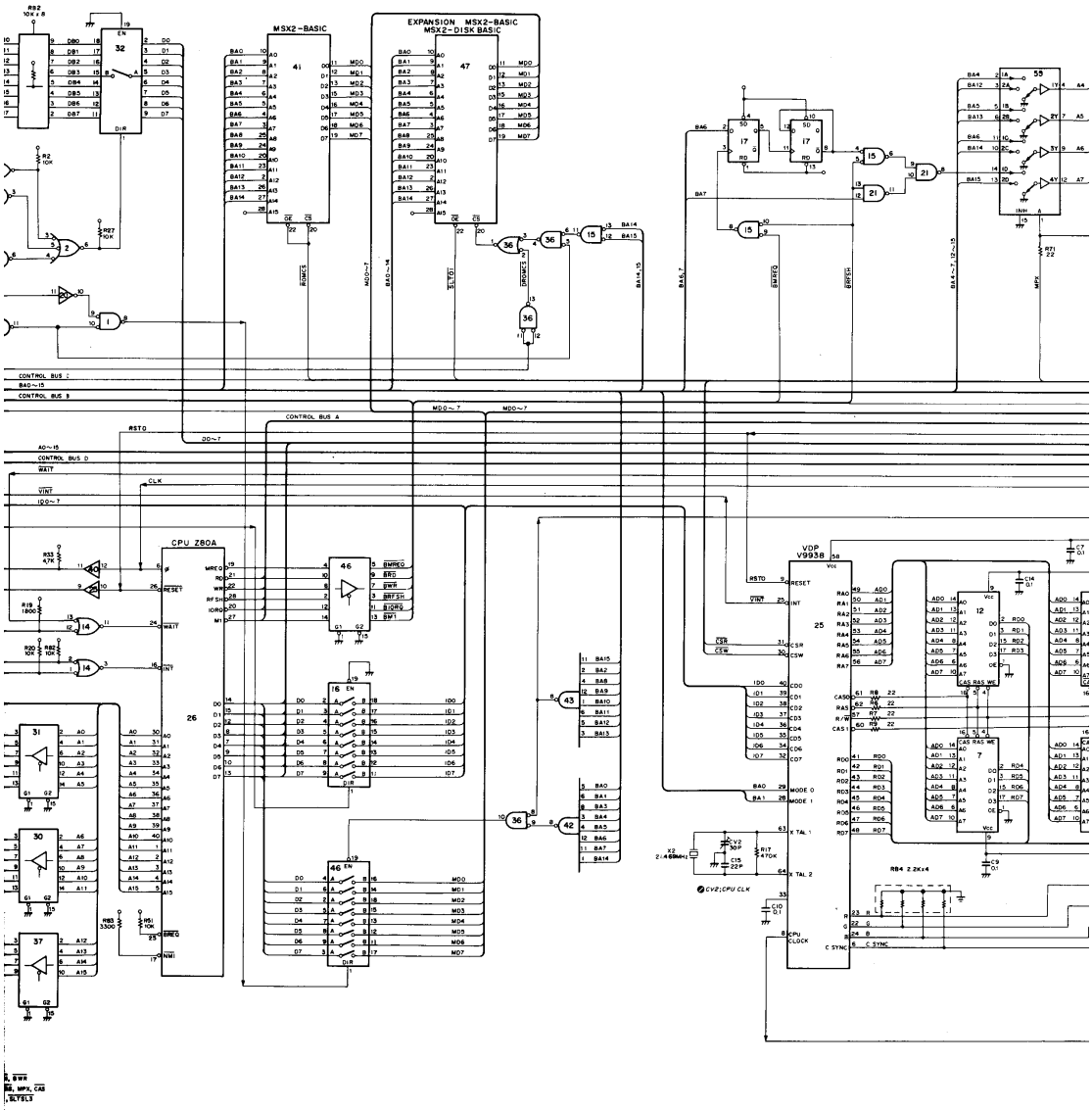
MSX2-BASIC
EXPANSION MSX2-BASIC
MSX2-DISK BASIC
CPU Z80A
VDP
V9938
CONTROL BUS A
CONTROL BUS B
CONTROL BUS D
CV2:CPU CLK

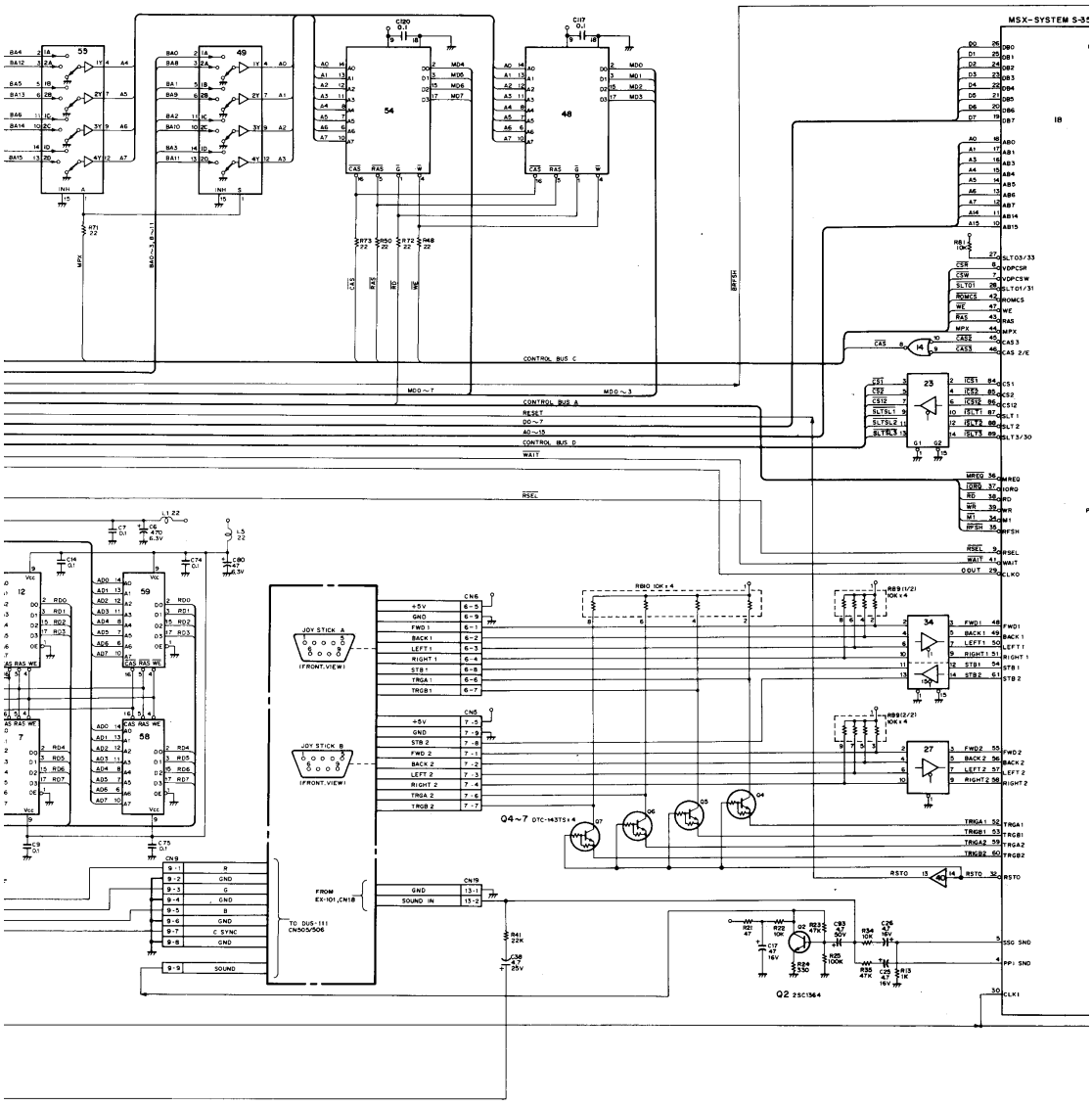
MSX-SYSTEM S-35
CONTROL BUS C
CONTROL BUS A
CONTROL BUS D
JOY STICK A
(FRONT VIEW)
JOY STICK B
(FRONT VIEW)
FROM EX-101,CN18
TO DUS-111 CN505/506
Q4~7 DTC-143TS×4
Q2 2SC1364

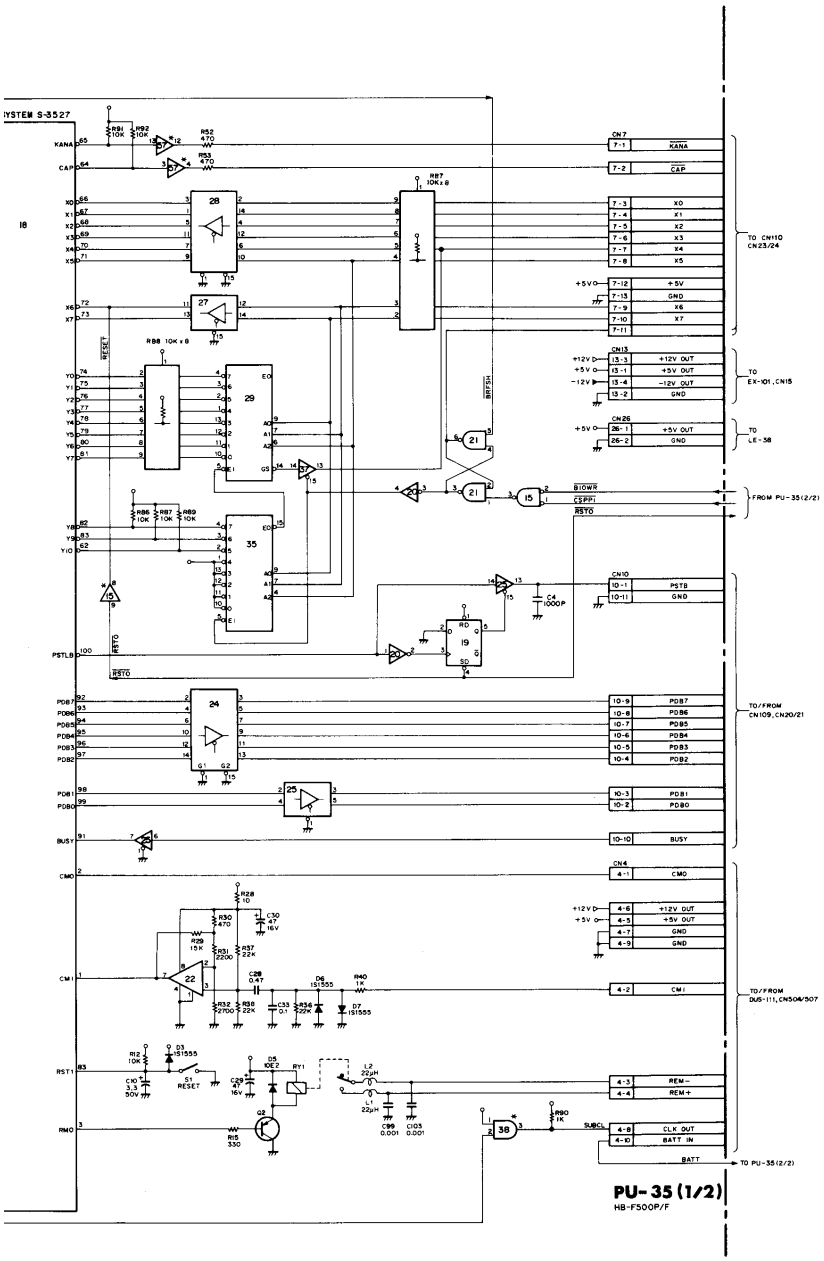
SYSTEM S-3527
KANA
CAP
X0
X1
X2
X3
X4
X5
X6
X7
Y0
Y1
Y2
Y3
Y4
Y5
Y6
Y7
Y8
Y9
Y10
PSTLB
PDB7
PDB6
PDB5
PDB4
PDB3
PDB2
PDB1
PDB0
BUSY
CM0
CM1
RST1
RM0
RESET
BRFSH
BIOWR
CSPPI
RSTO
CN7
CN13
CN26
CN10
CN4
+5V
GND
+12V OUT
-12V OUT
PSTB
CLK OUT
BATT IN
BATT
TO CN110 CN23/24
TO EX-101, CN15
TO LE-38
FROM PU-35(2/2)
TO/FROM CN109, CN20/21
TO/FROM DUS-111, CN504/507
TO PU-35(2/2)
PU-35 (1/2)
HB-F500P/F

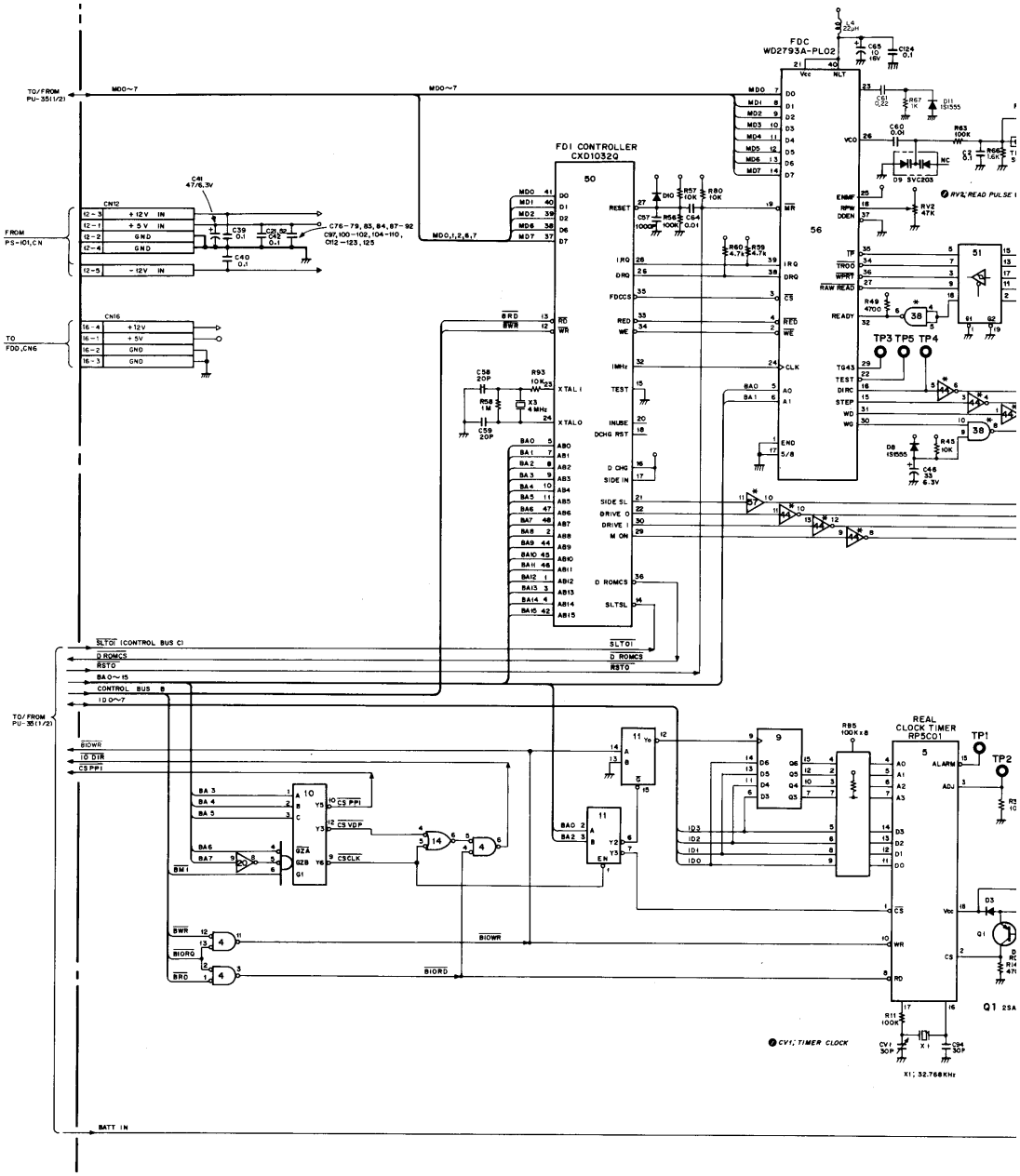
FDC
WD2793A-PL02
FDI CONTROLLER
CXD1032Q
REAL
CLOCK TIMER
RP5C01
TO/FROM
PU-351(1/2)
FROM
PS-101,CN
TO
FDD,CN6
TP3 TP5 TP4
TP1
TP2
BATT IN
X1; 32.768KHz

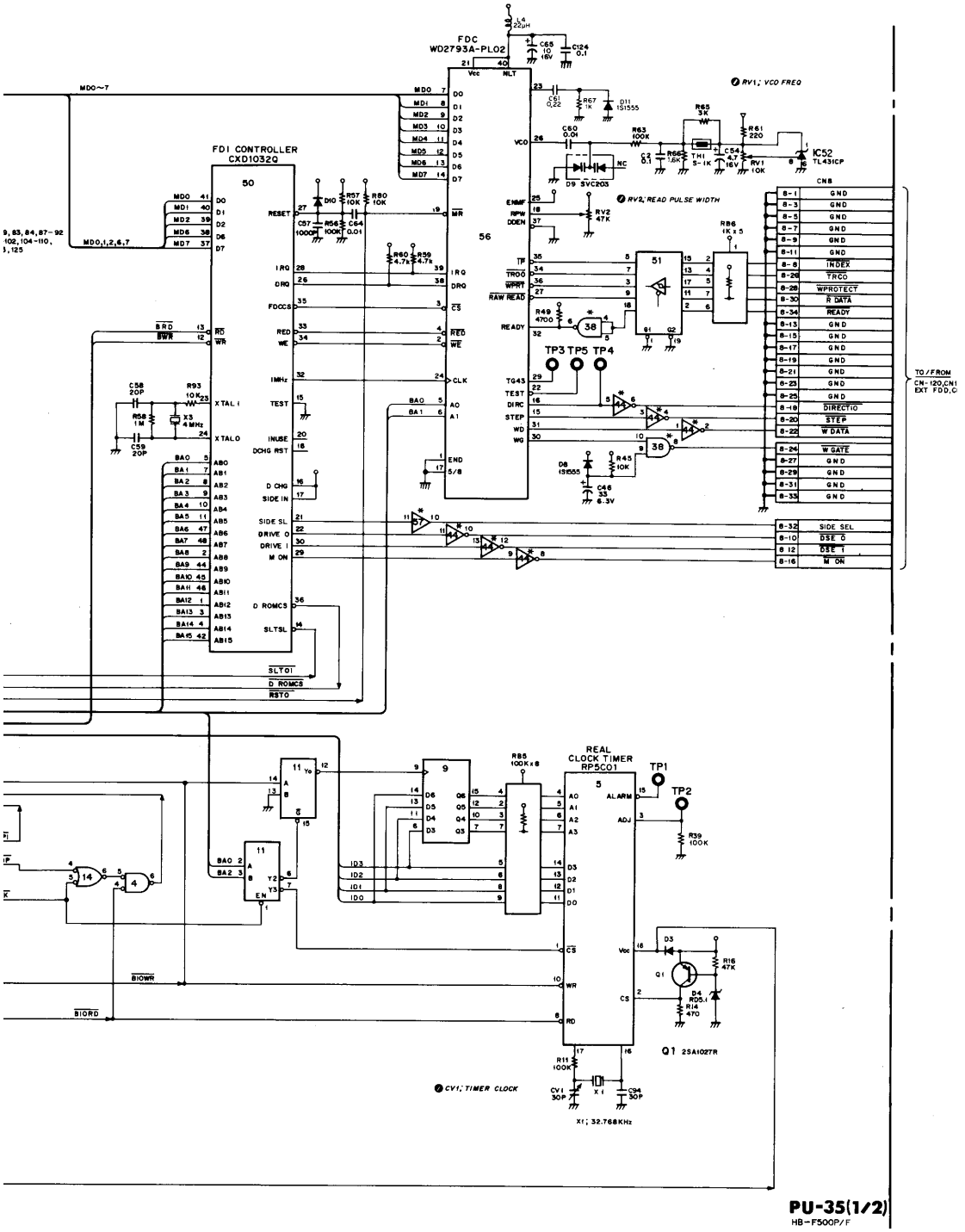

PU-35(1/2)
HB-F500P/F

REF.NO.	TYPE.NO.	+5V	GND
IC1	SN74LS32N,MB74LS32	14	7
IC2	SN74LS15N,MB74LS15	14	7
IC17	SN74LS74AN,MB74LS74A	14	7
IC4	SN74LS32N,MB74LS32	14	7
IC5	RP5C01	18	9
IC6	V9938	50	1,20,33
IC7, 58	MB81464-12,HD74LS174P	9	18
IC14	SN74LS08N,MB74LS08	14	7
IC9	SN74LS174N,MB74LS174	16	8
IC10	SN74LS138N,MB74LS138	16	8
IC11	SN74LS139N,MB74LS139	16	8
IC12, 59	MB81464-12	9	18
IC15	SN74LS32N,MB74LS32	14	7
IC16	SN74LS245N	16	8
IC18	S-3527	40	6,31,90
IC19	SN74LS74AN,MB74LS74A	14	7
IC20	SN74LS04N,MB74LS04	14	7
IC21	SN74LS00N,MB74LS	14	7
IC22	uPC311C	8	1
IC23	SN74LS367AN	16	8
IC24	SN74LS367AN	16	8
IC25	SN74LS367AN	16	8
IC26	LH0080A,uPD780C-1	11	9
IC27	SN74LS367AN	16	8
IC28	SN74LS367AN	16	8
IC29	SN74LS348N	16	8
IC30	SN74LS367AN	16	8
IC31	SN74LS367AN	16	8
IC32	SN74LS645N	20	10
IC33	SN74LS367AN	16	8
IC34	SN74LS367AN	16	8
IC35	SN74LS348N	16	8
IC36	SN74LS02N,MB74LS02	14	7
IC37	SN74LS367AN	16	8
IC38	SN74LS38N,MB74LS38	14	7
IC39	SN74LS367AN	16	8
IC40	SN74LS367AN	16	8
IC41	MB83256-253(FR)	28	14
	MB83256-251(AE)	28	14
IC42	SN74LS30N,MB74LS30	14	7
IC43	SN74LS30N,MB74LS30	14	7
IC44	SN7406N,SN74LS06N	14	7
IC45	SN74LS245N	16	8
IC46	SN7406N	14	7
IC47	MB83256-256(AE)	28	14
	MB83256-254(FR)	28	14
IC48	uPD41254C-15,uPD41464C-15	9	18
IC49	SN74LS157N,MB74LS157	16	8
IC50	CXD1032Q	43,19	6,31
IC51	SN74LS244N,MB74LS244	16	8
IC52	TL431CP	--	--
IC54	uPD41254C-15,uPD41464C-15	9	18
IC55	SN74LS157N,MB74LS157	16	8
IC56	WD2793A-PL02	21	20
IC57	SN7407N	14	7

D2	A-1	IC31	D-2
D3	B-3	IC32	A-3
D4	B-3	IC33	A-2
D5	C-4	IC34	C-1
D6	B-4	IC35	C-2
D7	B-4	IC36	B-1
D8	C-4	IC37	D-3
D9	C-4	IC38	C-4
D10	D-4	IC39	A-2
D11	C-4	IC40	B-2
		IC41	D-1
IC1	A-1	IC42	D-3
IC2	A-1	IC43	D-3
IC4	B-1	IC44	C-4
IC5	B-3	IC45	C-3
IC6	B-3	IC46	B-2
IC7	A-3	IC47	D-1
IC9	C-3	IC48	C-3
IC10	C-3	IC49	C-3
IC11	C-3	IC50	D-4
IC12	A-4	IC51	C-4
IC14	B-1	IC52	C-4
IC15	A-1	IC54	D-3
IC16	B-3	IC55	D-3
IC17	B-1	IC56	D-4
IC18	C-2	IC57	C-2
IC19	B-1	IC58	A-3
IC20	A-1	IC59	A-4
IC21	B-1		
IC22	B-4	Q1	B-3
IC23	C-1	Q2	B-4
IC24	C-3	Q3	B-3
IC25	C-3	Q4	C-1
IC26	B-2	Q5	C-1
IC27	C-1	Q6	C-1
IC28	C-2	Q7	C-1
IC29	C-2		
IC30	D-2		

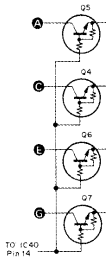

PU-35

A-8080-1
HB-F500P
A-8080-1
HB-F500F

D-2
A-3
A-2
C-1
C-2
B-1
D-3
C-4
A-2
B-2
D-1
D-3
D-3
C-4
C-3
B-2
D-1
C-3
C-3
D-4
C-4
C-4
D-3
D-3
D-4
C-2
A-3
A-4

B-3
B-4
B-3
C-1
C-1
C-1
C-1

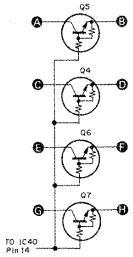

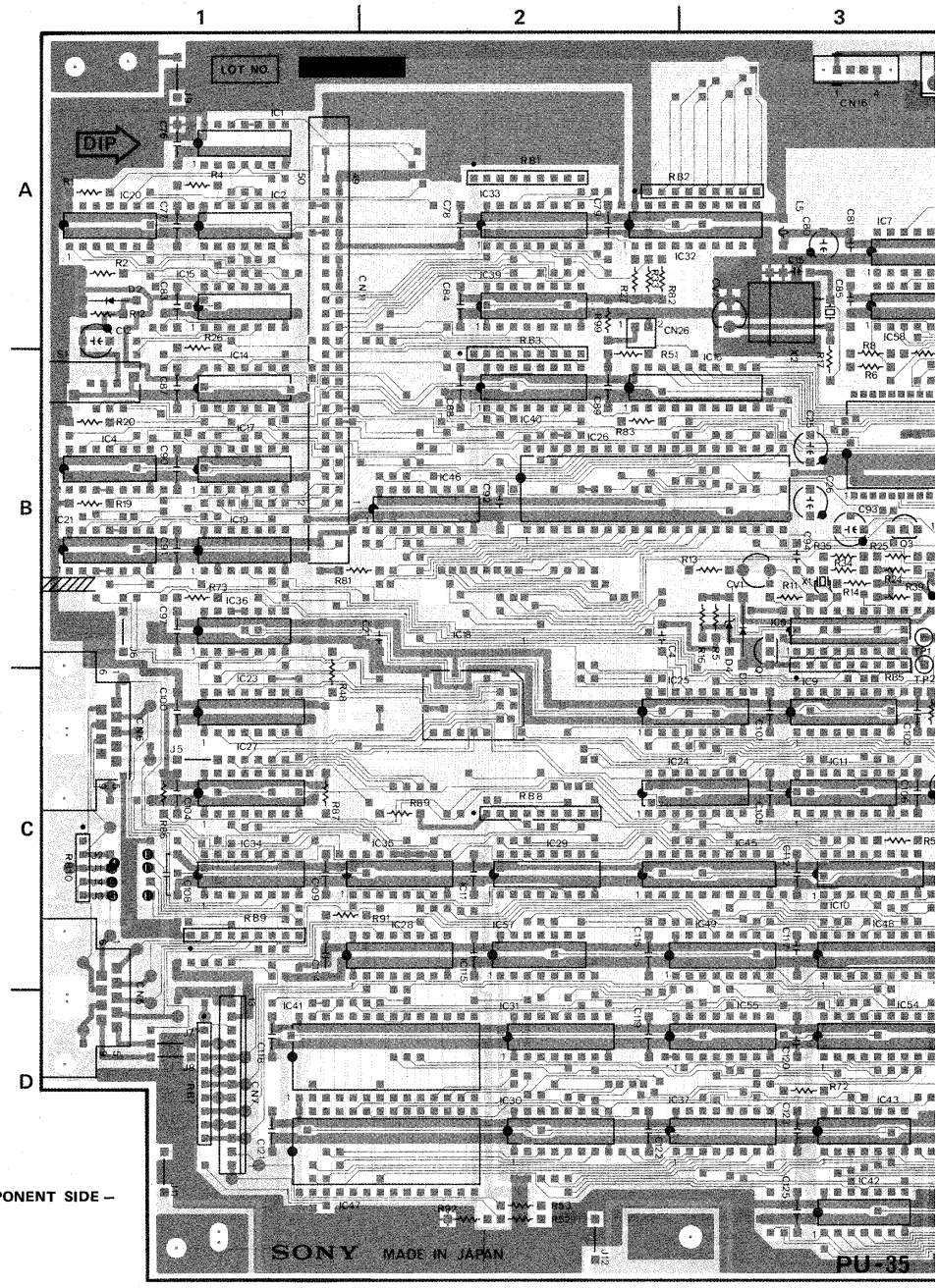

PU-35 – COMPONENT SIDE –
A-8080-134-A
HB-F500P (AE)
A-8080-151-A
HB-F500F (FR)

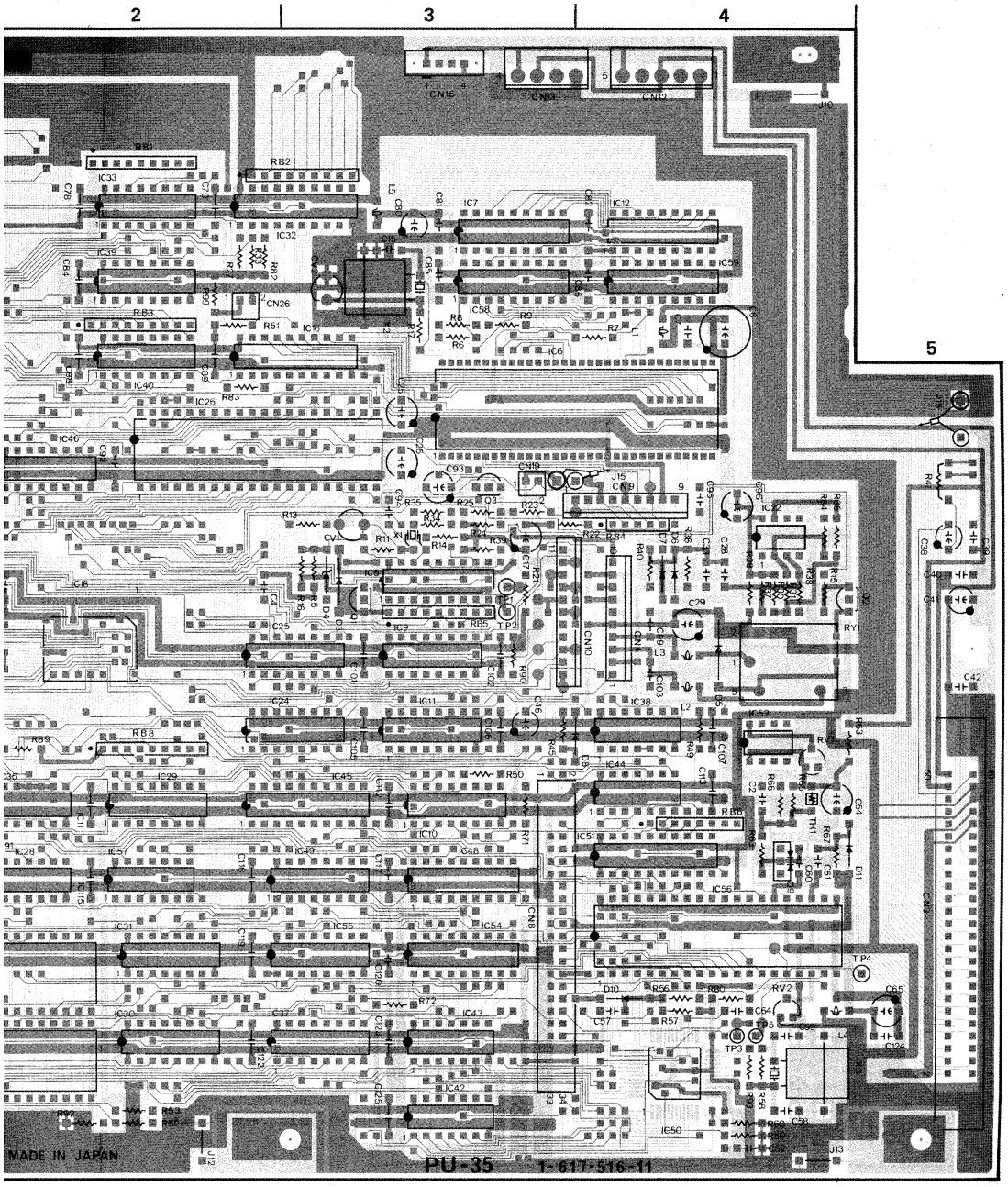
2
3
4
5
MADE IN JAPAN
PU-35 1-617-516-11

5-4. PS-101, LE-38 BOARD

5-5.

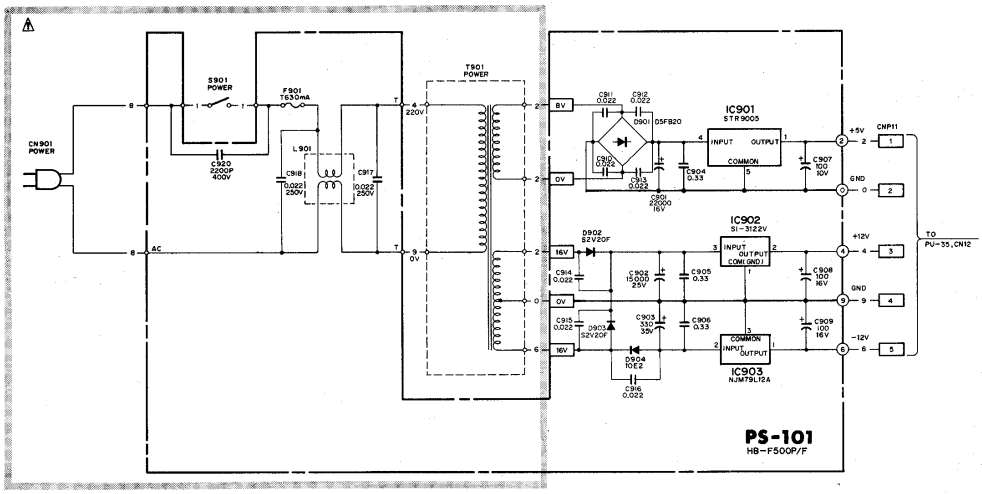

REF.NO.	TYPE.NO.	PIN NO.
IC901	STR9005	+5V REG
IC902	SI-3122V	+12V REG
IC903	NJM79L12A	-12V REG

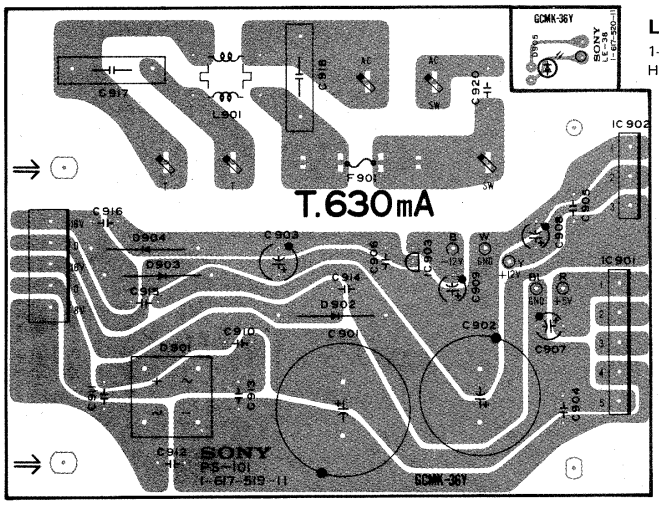

LE-38 – COMPONENT SIDE –
1-617-520-11
HB-F500P/F500F (AE/FR)

PS-101 – COMPONENT SIDE –
1-617-519-11
HB-F500P/F500F (AE/FR)

5-5. EX-101 BOARD

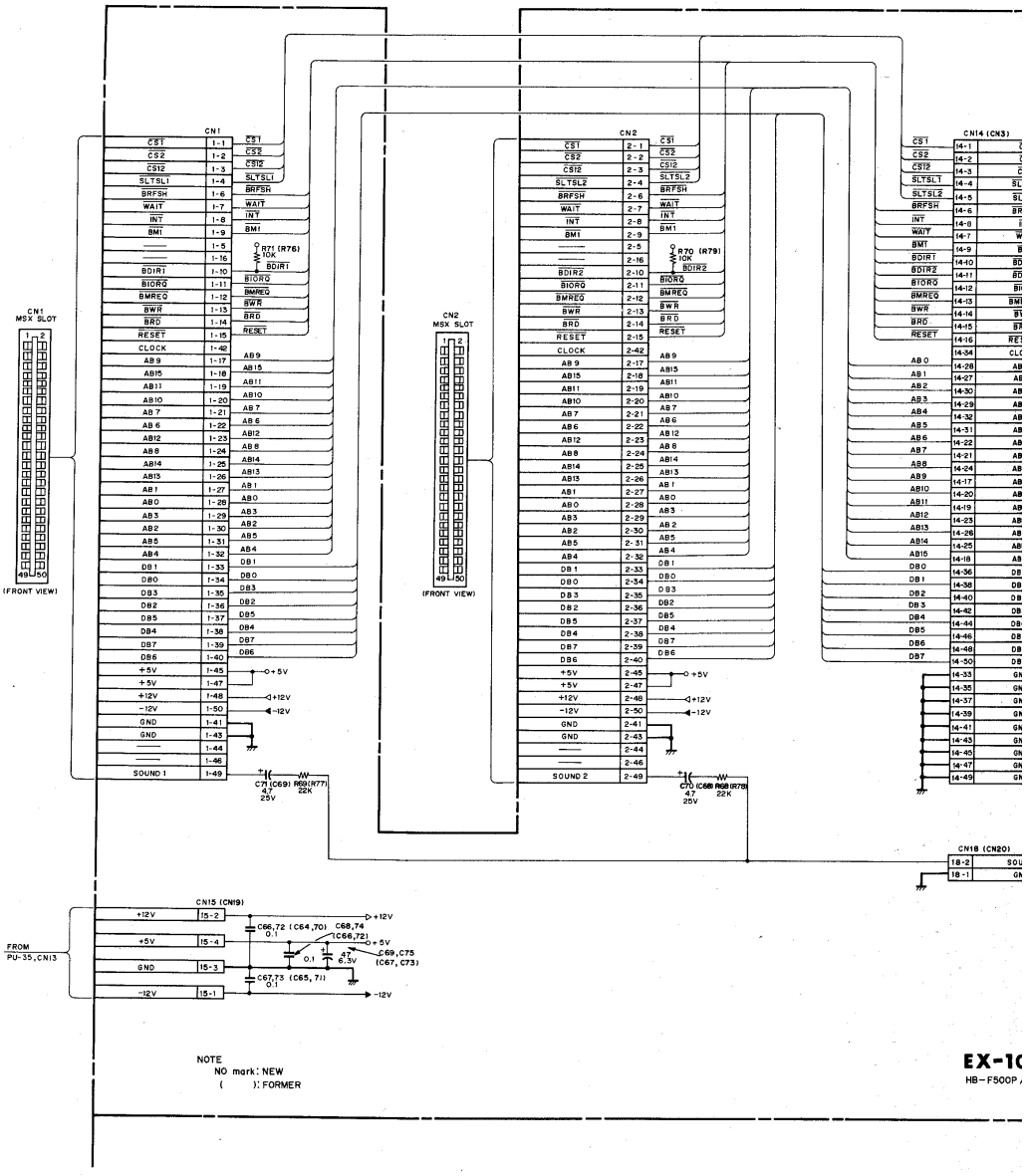

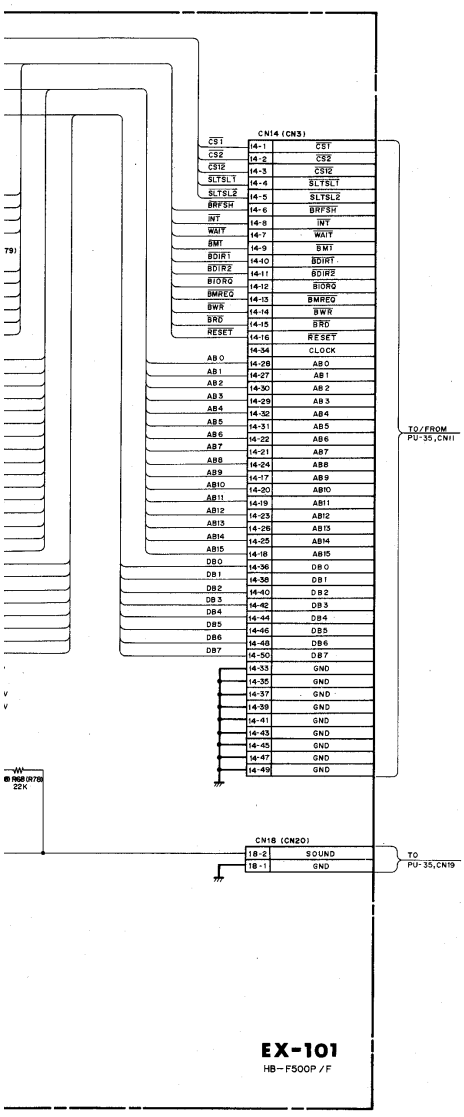

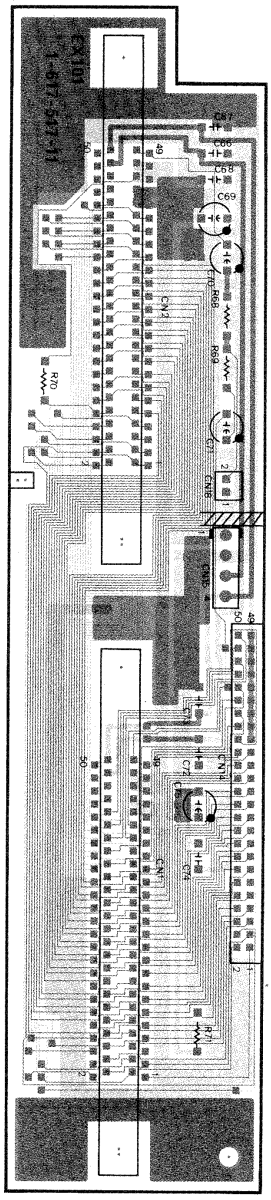

EX-101 – COMPONENT SIDE –
1-617-517-11
HB-F500P/F500F (AE/FR)

5-6. CN-120, CN-109 BOARD

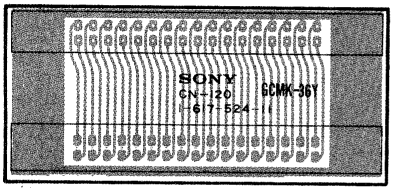

CN-120 – COMPONENT SIDE –
1-617-524-11
HB-F500P/F500F (AE/FR)

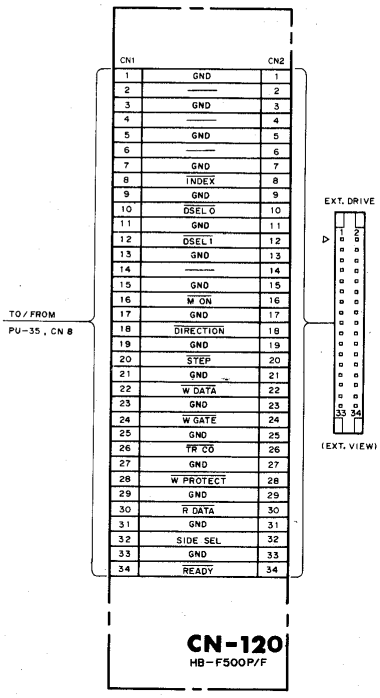

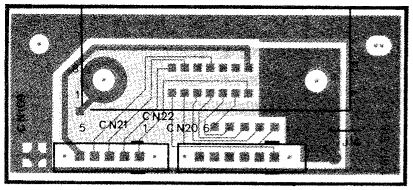

CN-109 – COMPONENT SIDE –
1-617-518-11
HB-F500P/F500F (AE/FR)

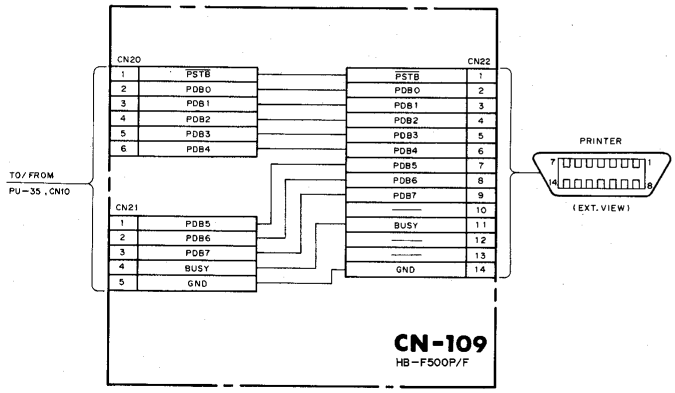

5-7. DUS-111 BOARD

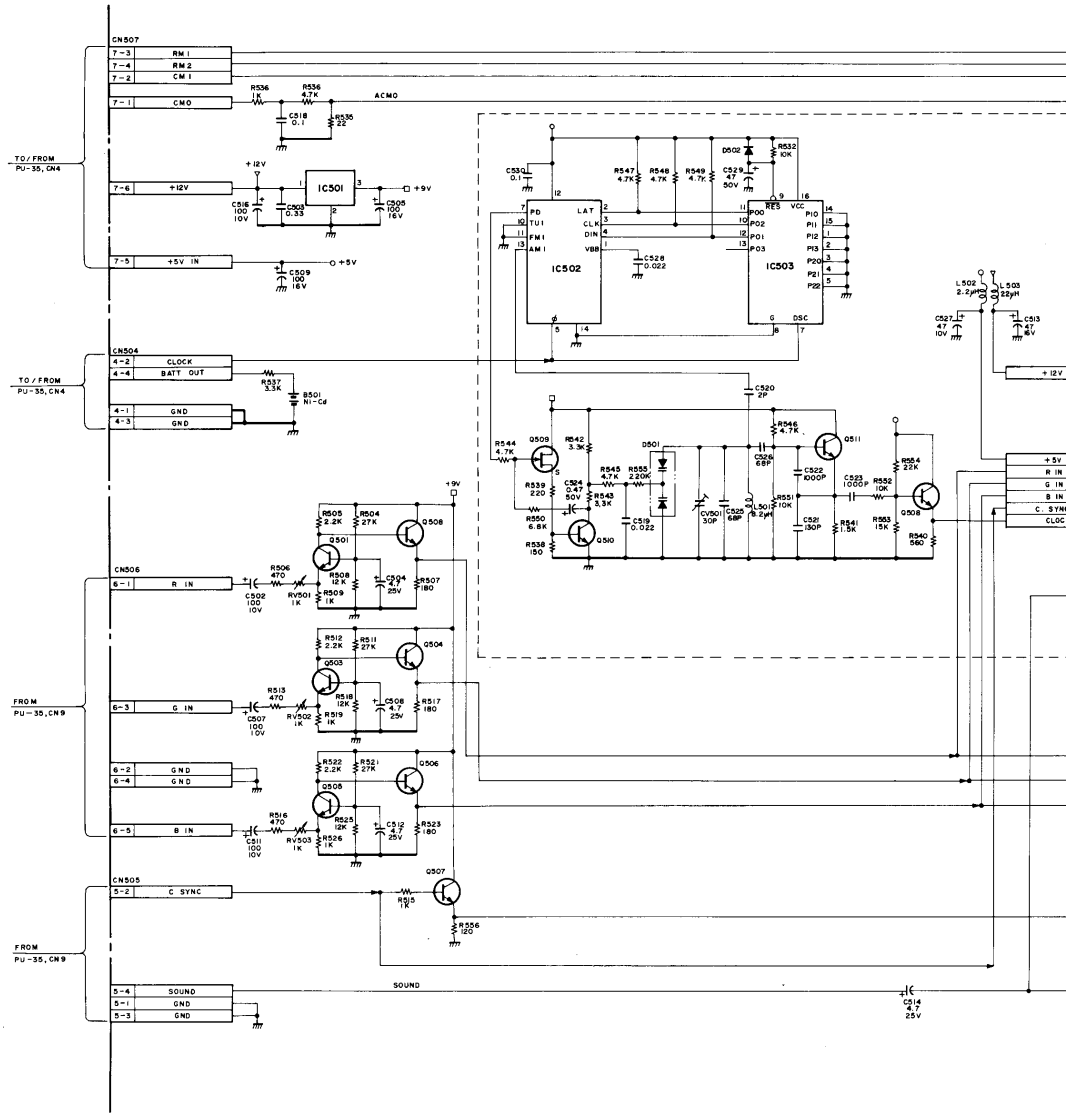

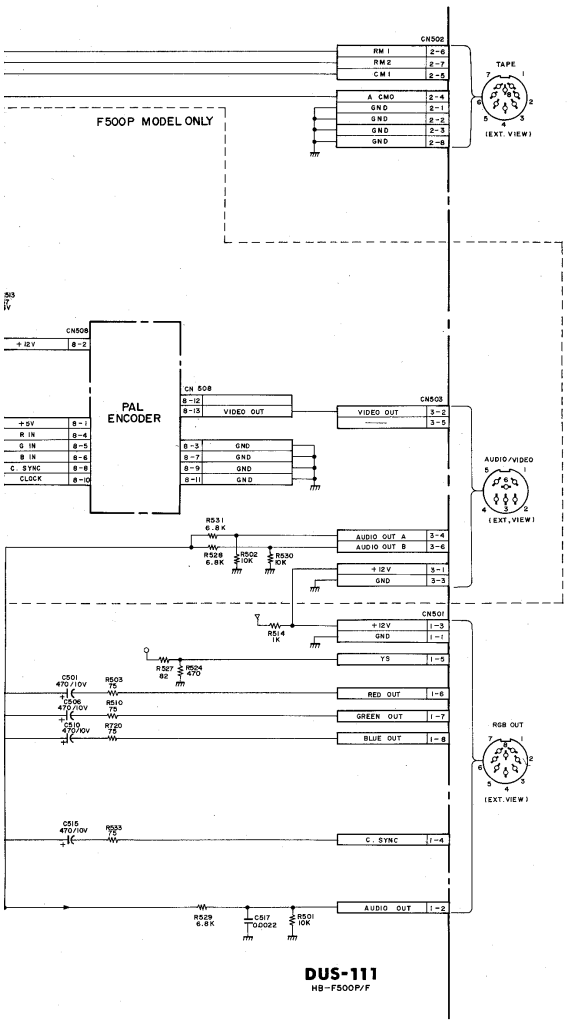
CN502
RM 1
RM 2
CM 1
A. CMO
GND
TAPE
(EXT. VIEW)
F500P MODEL ONLY
CN508
+12V
PAL ENCODER
CN 508
VIDEO OUT
CN503
AUDIO/VIDEO
(EXT. VIEW)
+5V
R IN
G IN
B IN
C. SYNC
CLOCK
AUDIO OUT A
AUDIO OUT B
CN501
YS
RED OUT
GREEN OUT
BLUE OUT
RGB OUT
C. SYNC
AUDIO OUT
DUS-111
HB-F500P/F

PAL ENCODER

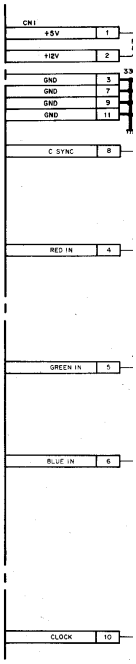
CN1
+5V
+12V
GND
GND
GND
GND
C SYNC
RED IN
GREEN IN
BLUE IN
CLOCK

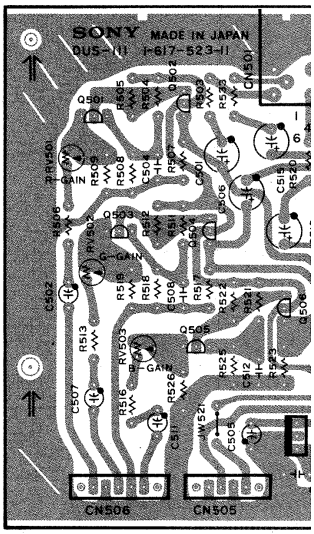
SONY
MADE IN JAPAN
DUS-111 1-617-523-11
CN501
CN506
CN505

PAL ENCODER

REF.NO.	TYPE NO.	PIN NO.	
		+5V	GND
IC1	SN74LS04N	14	7
IC2	LVA510	9	1

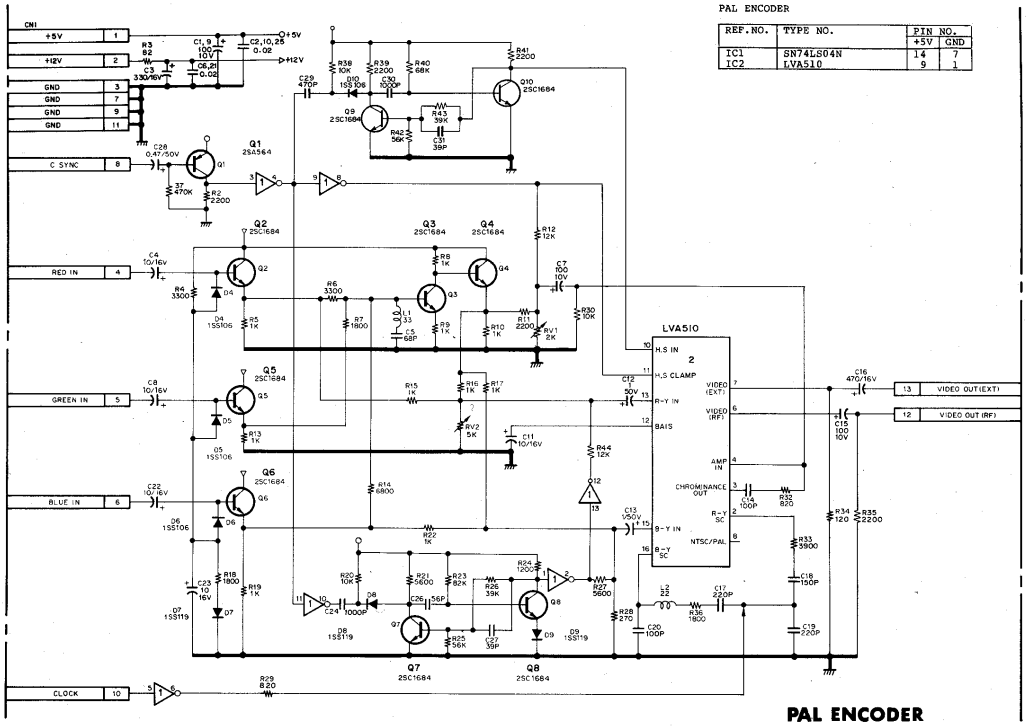

PAL ENCODER

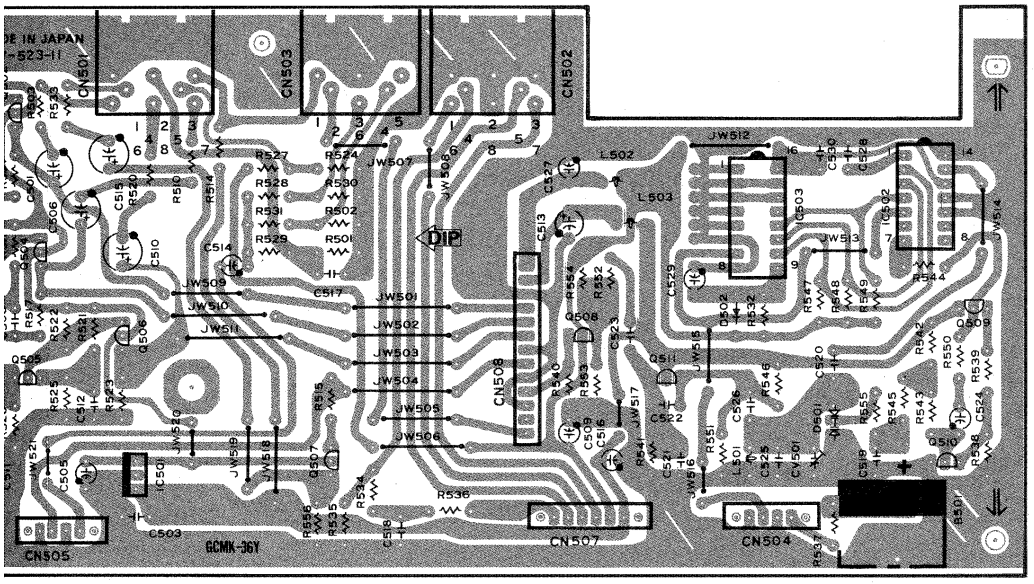

DUS-111 – COMPONENT SIDE –

1-617-523-11

HB-F500P/F500F (AE/FR)

5-8. CN-110, KEY BOARD

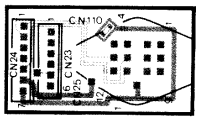

CN-100 – COMPONENT SIDE –
1-617-521-11
HB-F500P/F500F (AE/FR)

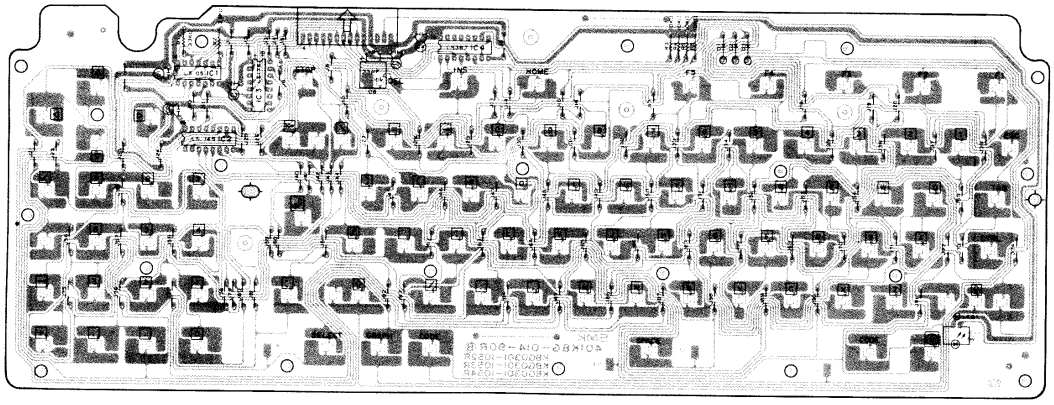

KEY – COMPONENT SIDE –
1-464-568-11
HB-F500P(AE)

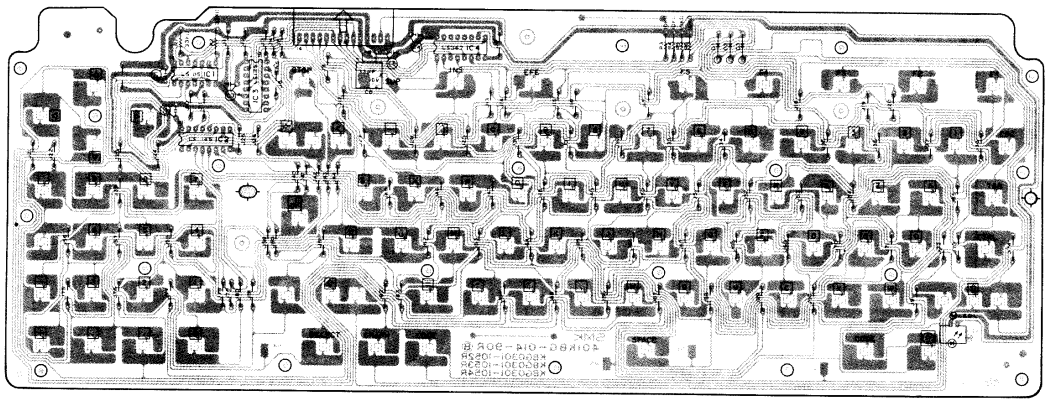

KEY – COMPONENT SIDE –
1-464-570-11
HB-F500F(FR)

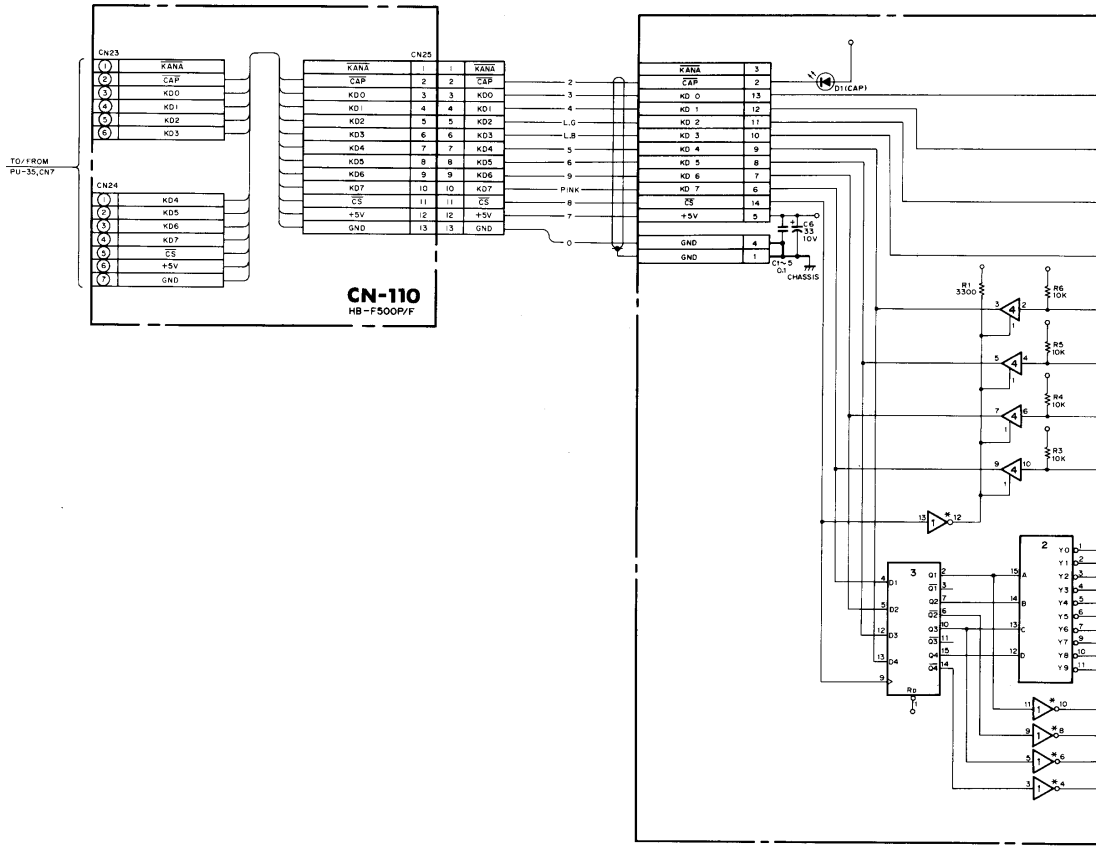
CN23
KANA
CAP
KD0
KD1
KD2
KD3
CN24
KD4
KD5
KD6
KD7
CS
+5V
GND
TO/FROM PU-35, CN7
CN25
CN-110
HB-F500P/F
D1(CAP)
C6 33 10V
C1~5 0.1
CHASSIS
R1 3300
R6 10K
R5 10K
R4 10K
R3 10K
R0

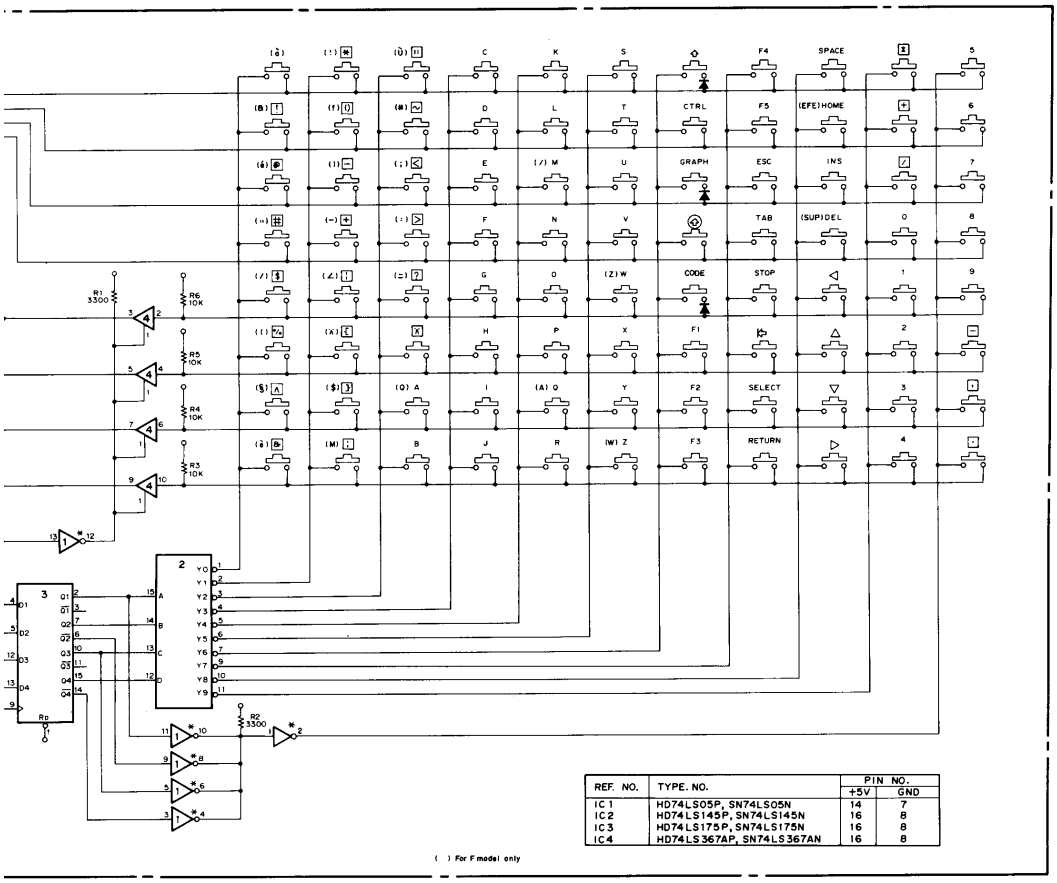

REF. NO.	TYPE. NO.	PIN NO.	
		+5V	GND
IC1	HD74LS05P, SN74LS05N	14	7
IC2	HD74LS145P, SN74LS145N	16	8
IC3	HD74LS175P, SN74LS175N	16	8
IC4	HD74LS367AP, SN74LS367AN	16	8

( ) For F model only

KEY
HB-F500P/F

CHAPTER 6
ALIGNMENT

6-1. PREPARATION

6-1-1. Example of Adjusting Program (BASIC)

```
10  '******************
20  '*                *
30  '* CHECK PROGRAM  *
40  '* for HB-F5/F500 *
50  '*                *
60  '******************
70  CLS
80  PRINT;"Push any key?":PRINT
90  PRINT;"1.Push W key=RGB level adj."
100 PRINT;"2.Push S key=Timer Clock adj.(set)"
110 PRINT;"3.Push R key=Timer Clock adj.(reset)"
120 A$=INKEY$
130 IF A$="W" OR A$="w" THEN 170
140 IF A$="S" OR A$="s" THEN 190
150 IF A$="R" OR A$="r" THEN 230
160 GOTO 120
170 SCREEN 1:COLOR 15,15,15:'White
180 GOTO 120
190 SCREEN 1:COLOR 15,4,7:'MENU
200 OUT &HB4,14:OUT &HB5,0
210 OUT &HB4,15:OUT &HB5,8:'Timer Clock adj.(set)
220 GOTO 80
230 SCREEN 1:COLOR 15,4,7:'MENU
240 OUT &HB5,12:'Timer Clock adj.(reset)
250 GOTO 80
```

6-1-2. Use of Adjusting Program Example

When the program is run, the MENU display appears on the screen.

1. Press the W key.
   The whole screen display turns white.
   Used for the RGB level adjustment.
2. Press the S key.
   Used for the timer block adjustment.
   A 16Hz frequency appears at IC11 through IC15.
3. Press the R key.
   Cancels the timer clock adjustment.

6-1-3. Connection

. Connect the KX-14CP1 RGB monitor to RGB connecor CN501 or terminate the RGB output terminals (pins 6, 7, and 8) of CN501 in 75 ohms.

6-2. CPU CLOCK FREQUENCY ADJUSTMENT

Equipment Required:	Frequency counter
Condition:	Power ON
Check Point:	IC26, pin 6/PU-35 board
Specification:	3.578281Hz ±5Hz
Adjustment:	CV/PU-35 board

6-3. TIMER CLOCK FREQUENCY ADJUSTMENT

Connection:	Connect 100k-ohm pull-up resistors between IC5 and +5V dc.
Equipment Required:	Frequency counter
Condition:	. Run the adjusting program and press the S key. . After adjustment is completed, press the R key.
Check Point:	IC11, pin 15/PU-35 board
Specification:	15.9999Hz - 16.0001Hz
Adjustment:	CV1/PU-35 board

6-4. RGB OUTPUT LEVEL ADJUSTMENT

6-4-1. R Level Adjustment

Equipment Required:	Oscilloscope
Condition:	. Run the adjusting program and press the W key. . After adjustment is completed, press the R key.
Check Point:	CN501, pin 6/DUS-111 board
Specification:	A=0.7V ± 0.02V

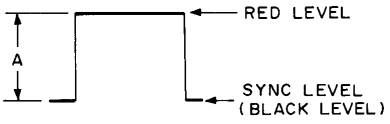

Adjustment:	RV501/DUS-111 board

6-4-2. B Level Adjustment

Equipment Required: Oscilloscope

Condition:
- Run the adjusting program and press the W key.
- After adjustment is completed, press the R key.

Check Point: CN501, pin 8/DUS-111 board

Specification: A=0.7V ± 0.02V

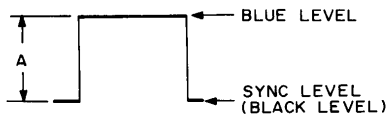

Adjustment: RV502/DUS-111 board

6-4-3. G Level Adjustment

Equipment Required: Oscilloscope

Condition:
- Run the adjusting program and press the W key.
- After adjustment is completed, press the R key

Check Point: CN501, pin 7/DUS-111 board

Specification: A=0.7V ± 0.02V

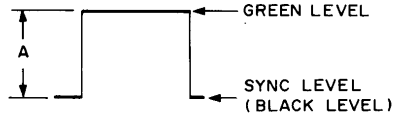

Adjustment: RV502/DUS-111 board

6-5. FDC ADJUSTMENT

6-5-1. VCO Frequency Adjustment

Equipment Required: Frequency counter

Condition: Three minutes after the power is turned on, connect TP5 to ground using a jumper wire.

Check Point: TP4/PU-35 board

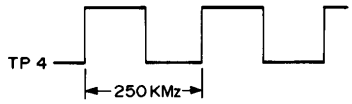

Specification: 250kHz ± 1kHz

Adjustment: RV1/PU-35 board

Note: After adjustment is completed, remove the jumper wire.

6-5-2. Read Pulse Width Adjustment

Equipment Required: Oscilloscope

Condition: Three minutes after the power is turned on, connect TP5 to ground using a jumper wire.

Check Point: TP3/PU-35 board

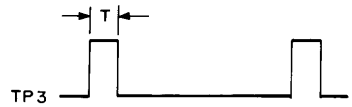

Specification: T=0.5µsec ± 10nsec

Adjustment: RV2/PU-35 board

Note: After adjustment is completed, remove the jumper wire.

CHAPTER 7
REPAIR PARTS AND FIXTURE

7-1. EXPLODED VIEWS

7-1-1. Cover Block

No.	Parts No.	Description
1	**X-4608-903-2**	**(AEP) . . . PANEL ASSY, FRONT**
1	**X-4608-904-1**	**(FRANCE) . . . PANEL ASSY, FRONT**
⚠3	**1-534-817-XX**	**CORD, POWER, EULO PLUG**
4	1-617-524-11	PC BOARD, CN-120
5	1-617-520-11	PC BOARD, LE-38
⚠6	**4-703-244-00**	**BUSHING (2104), CORD**
7	3-706-165-00	SCREW
8	4-605-478-01	(FRANCE) . . . LABEL, CAUTION
9	**4-605-615-01**	**SPRING**
10	**4-608-914-01**	**LID, CARTRIDGE "1"**
11	**4-608-914-11**	**LID, CARTRIDGE "2"**
12	**4-608-922-01**	**(AEP) . . . PLATE, JACK**
12	**4-608-922-11**	**(FRANCE) . . . PLATE, JACK**
13	**4-608-924-02**	**CASE**
14	**4-889-321-01**	**SCREW**
15	**4-838-906-01**	**FOOT, F**
16	**4-608-908-01**	**COVER, CARTRIDGE**

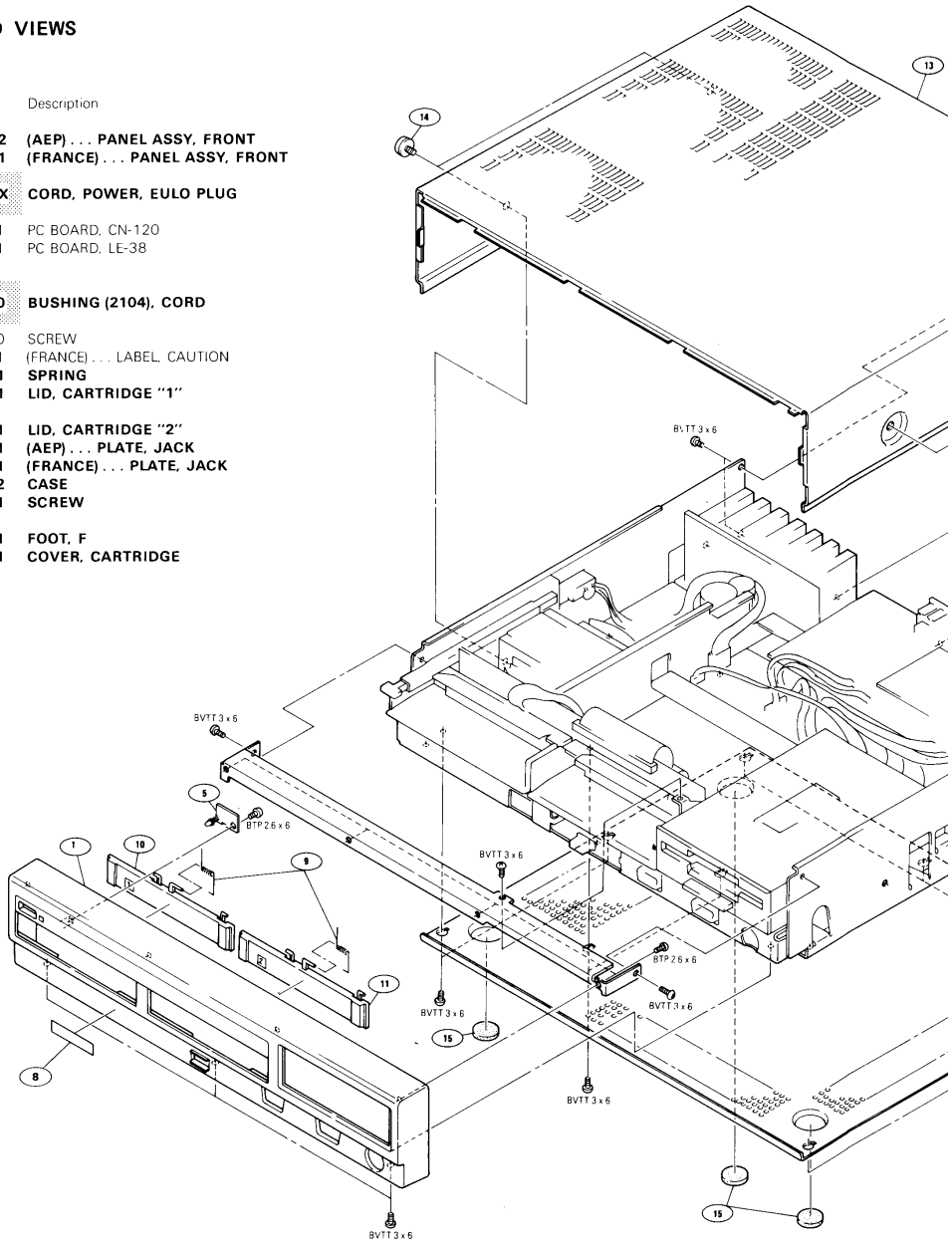

COVER BLOCK

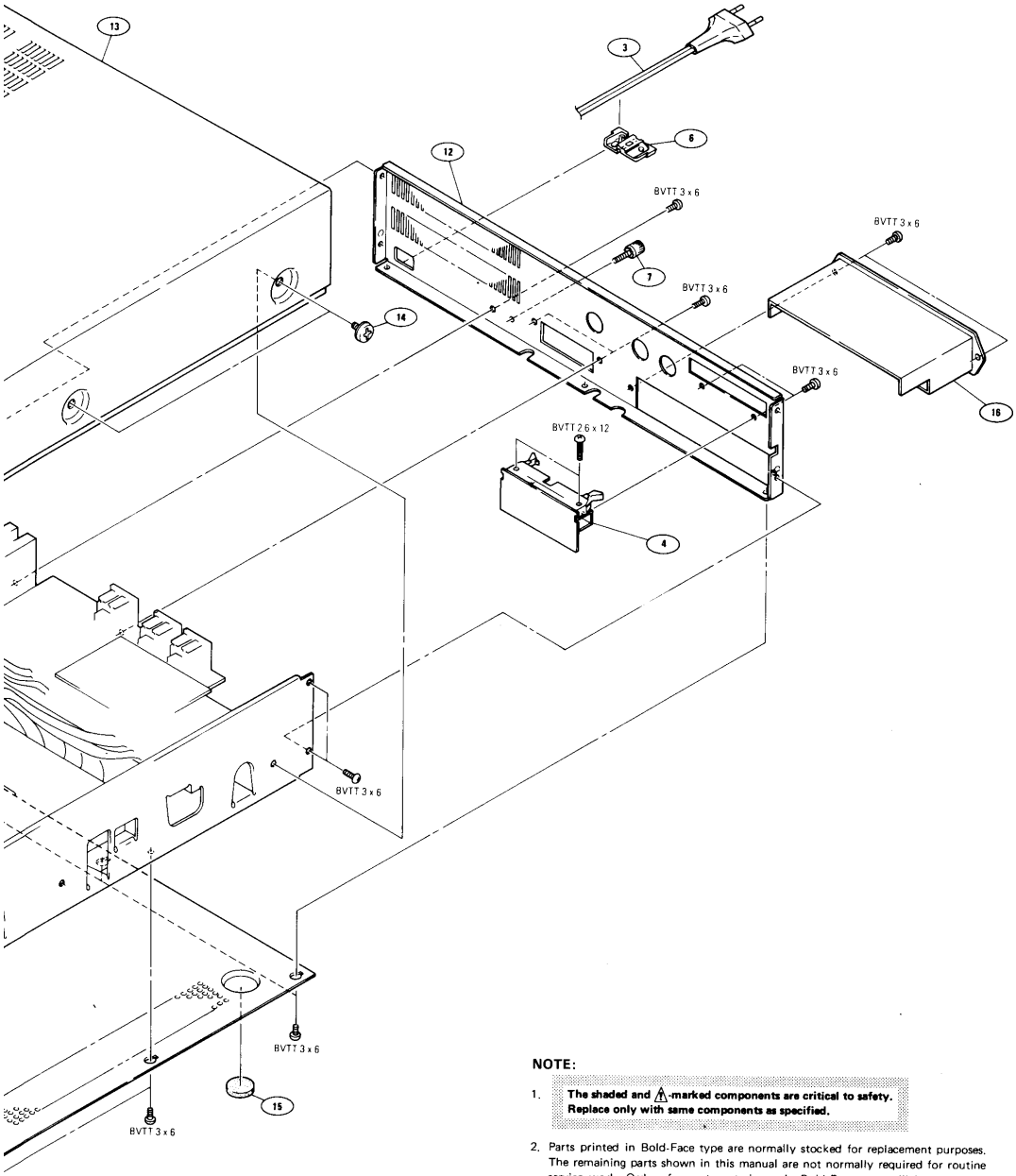

NOTE:

1. **The shaded and ⚠-marked components are critical to safety. Replace only with same components as specified.**
2. Parts printed in Bold-Face type are normally stocked for replacement purposes. The remaining parts shown in this manual are not normally required for routine service work. Orders for parts not shown in Bold-Face type will be processed, but allow for additional delivery time.
3. Item with no part number and/or no description are not stocked because they are seldom required for routine service.

7-1-2. Chassis Block

No.	Parts No.	Description
51	A-8080-134-A	(AEP) . . . MOUNTED PCB, PU-35
51	A-8080-151-A	(FRANCE) . . . MOUNTED PCB, PU-35
⚠52	**1-448-359-12**	**TRANSFORMER, POWER**
53	1-550-222-11	DISK, DOUBLE-FACE MICRO FLOPPY
⚠54	**1-553-318-00**	**SWITCH, PUSH (AC POWER) (1 KEY)**
55	4-605-609-21	BUTTON, POWER
55	1-617-523-11	PC BOARD, DUS-111
56	1-617-517-11	PC BOARD, EX-101
57	1-617-518-11	PC BOARD, CN-109
58	1-617-519-11	PC BOARD, PS-101
59	1-617-521-11	PC BOARD, CN-110
60	**4-605-609-21**	**BUTTON, POWER**
61	**4-608-904-01**	**BUTTON, RESET**
62	**4-608-905-01**	**ROD, PS**
63	**4-608-907-01**	**SHEET, COOL**
64	**4-608-915-01**	**HOLDER, CARTRIDGE**
65	**4-902-825-01**	**HEAT SINK (SMALL)**
66	**1-464-577-11**	**(AEP) . . . ENCODER, RAL**
67	4-608-929-01	(AEP) . . . SPACER, PC BOARD
68	**9-989-589-01**	**FRONT BEZEL**

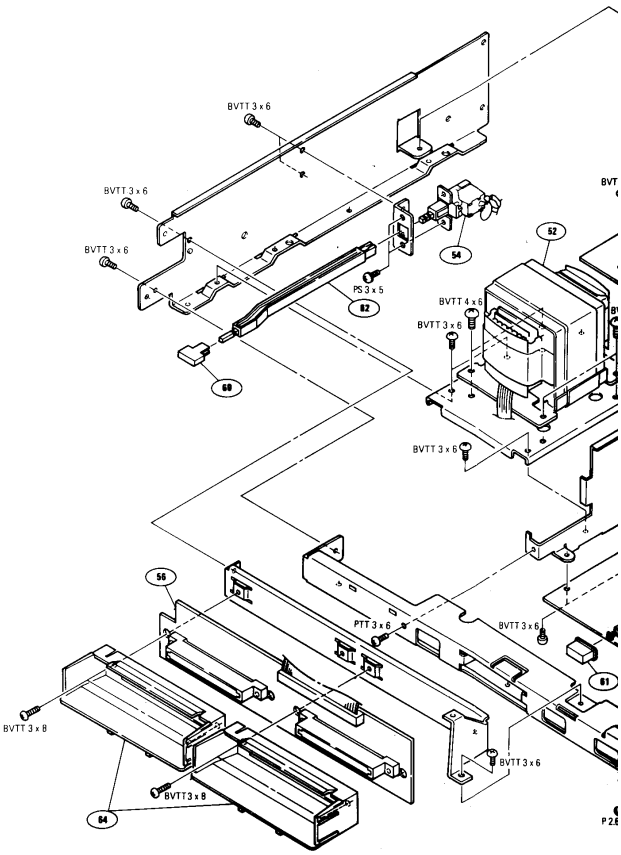

NOTE:

1. **The shaded and ⚠-marked components are critical to safety. Replace only with same components as specified.**
2. Parts printed in Bold-Face type are normally stocked for replacement purposes. The remaining parts shown in this manual are not normally required for routine service work. Orders for parts not shown in Bold-Face type will be processed, but allow for additional delivery time.
3. Item with no part number and/or no description are not stocked because they are seldom required for routine service.

CHASSIS BLOCK

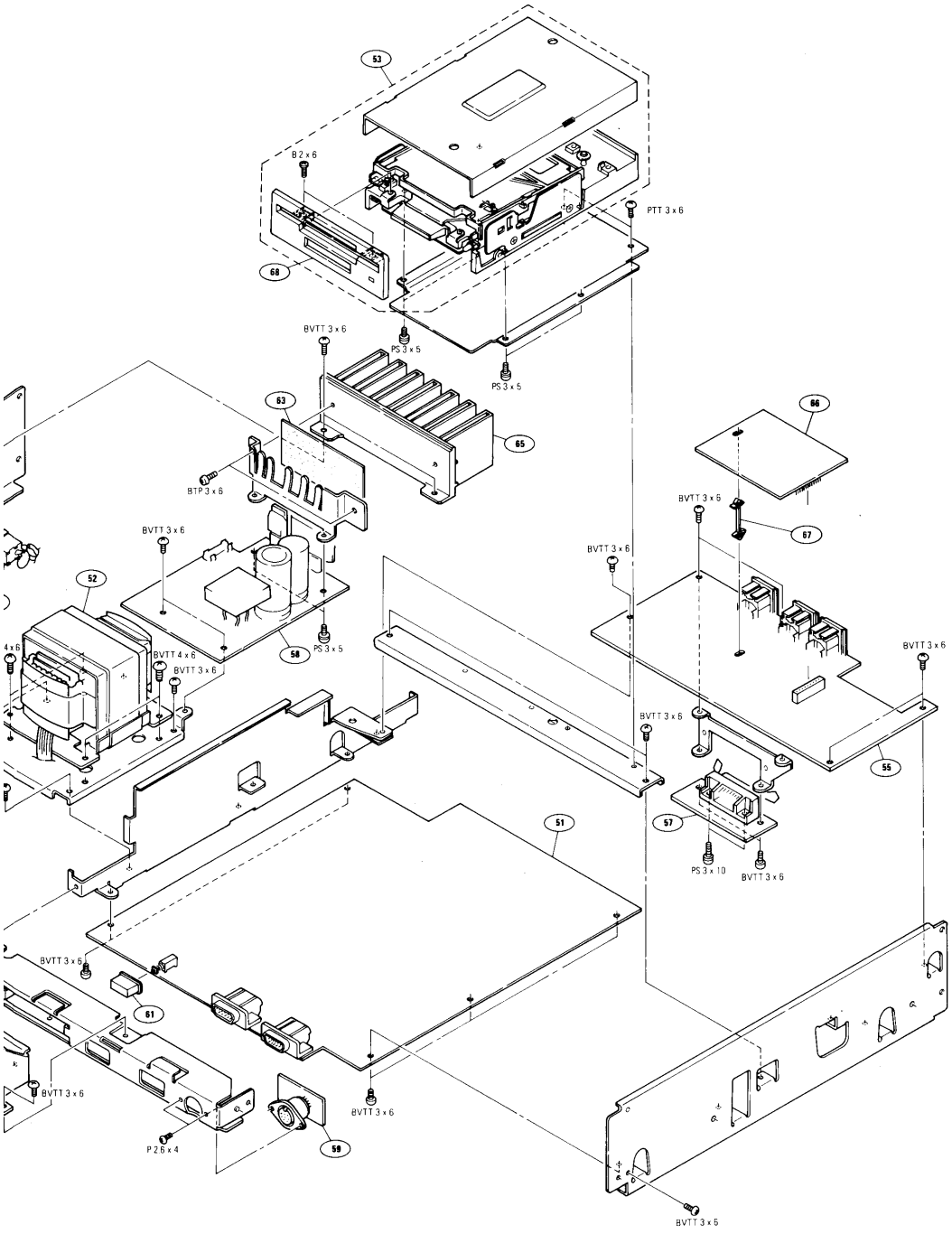

7-1-3. Keyboard Unit (for HB-F500F)

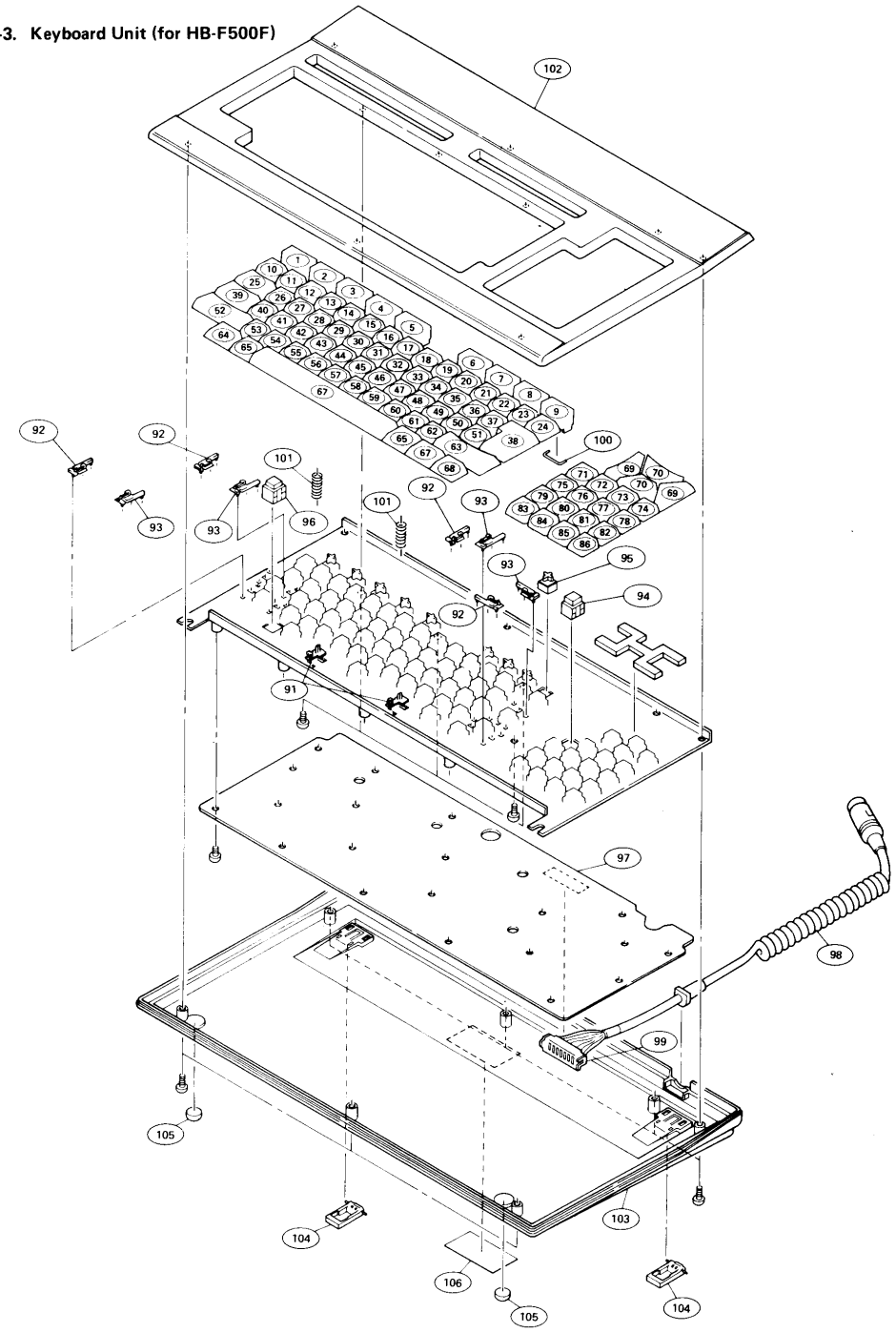

KEYBOARD UNIT (for HB-F500F)

Ref No	Parts No	Description
1	9-989-209-01	KEY TOP F1
2	9-989-210-01	KEY TOP F2
3	9-989-211-01	KEY TOP F3
4	9-989-212-01	KEY TOP F4
5	9-989-213-01	KEY TOP F5
6	9-989-370-01	KEY TOP EFE
7	9-989-215-01	KEY TOP INS
8	9-989-371-01	KEY TOP SUP
9	9-989-217-01	KEY TOP STOP
10	9-989-218-01	KEY TOP ESC
11		
12	9-989-372-01	KEY TOP &
13	9-989-373-01	KEY TOP é
13	9-989-374-01	KEY TOP "
14	9-989-375-01	KEY TOP '
15	9-989-376-01	KEY TOP (
16	9-989-377-01	KEY TOP §
17	9-989-378-01	KEY TOP è
18	9-989-379-01	KEY TOP !
19	9-989-380-01	KEY TOP c
20	9-989-381-01	KEY TOP à
21	9-989-382-01	KEY TOP)
22	9-989-383-01	KEY TOP —
23	9-989-384-01	KEY TOP <
24	9-989-327-01	KEY TOP ⊨
25	9-989-233-01	KEY TOP TAB
26	9-989-385-01	KEY TOP A
27	9-989-386-01	KEY TOP Z
28	9-989-387-01	KEY TOP E
29	9-989-388-01	KEY TOP R
30	9-989-389-01	KEY TOP T
31	9-989-390-01	KEY TOP Y
32	9-989-391-01	KEY TOP U
33	9-989-392-01	KEY TOP I
34	9-989-393-01	KEY TOP O
35	9-989-394-01	KEY TOP P
36	9-989-395-01	KEY TOP ⁂
37	9-989-396-01	KEY TOP $
38	9-989-369-01	KEY RETURN ASSY
39	9-989-310-01	KEY CTRL ASSY
40	9-989-397-01	KEY TOP Q
41	9-989-398-01	KEY TOP S
42	9-989-399-01	KEY TOP D
43	9-989-400-01	KEY TOP F
44	9-989-401-01	KEY TOP G
45	9-989-402-01	KEY TOP H
46	9-989-403-01	KEY TOP J
47	9-989-404-01	KEY TOP K
48	9-989-405-01	KEY TOP L
49	9-989-406-01	KEY TOP M
50	9-989-407-01	KEY TOP ù
51	9-989-408-01	KEY TOP #
52	9-989-311-01	KEY SHIFT LEFT ASSY
53	9-989-409-01	KEY TOP W
54	9-989-410-01	KEY TOP X
55	9-989-411-01	KEY TOP C

Ref No	Parts No	Description
56	9-989-412-01	KEY TOP V
57	9-989-413-01	KEY TOP B
58	9-989-414-01	KEY TOP N
59	9-989-415-01	KEY TOP ?
60	9-989-416-01	KEY TOP :
61	9-989-417-01	KEY TOP :
62	9-989-418-01	KEY TOP =
63	9-989-422-01	KEY SHIFT RIGHT ASSY
64	9-989-363-01	KEY TOP (⇧)
65	9-989-364-01	KEY TOP CODE.
66	9-989-313-01	KEY SPACE ASSY
67	9-989-270-01	KEY TOP GRAPH
68	9-989-272-01	KEY TOP SELECT
69	9-989-273-01	CURSOR KEY SNY
70	9-989-274-01	CURSOR KEY SNY
71	9-989-275-01	KEY TOP 7
72	9-989-276-01	KEY TOP 8
73	9-989-277-01	KEY TOP 9
74	9-989-278-01	KEY TOP /
75	9-989-279-01	KEY TOP 4
76	9-989-280-01	KEY TOP 5
77	9-989-281-01	KEY TOP 6
78	9-989-282-01	KEY TOP *
79	9-989-283-01	KEY TOP 1
80	9-989-284-01	KEY TOP 2
81	9-989-285-01	KEY TOP 3
82	9-989-286-01	KEY TOP −
83	9-989-287-01	KEY TOP 0
84	9-989-288-01	KEY TOP .
85	9-989-289-01	KEY TOP ,
86	9-989-290-01	KEY TOP +
91	9-989-291-01	HOOK A
92	9-989-292-01	HOOK C
93	9-989-293-02	NOOK D
94	9-989-294-01	KEY SWITCH
95	9-989-295-01	KEY SWITCH
96	9-989-296-01	KEY SWITCH
97	9-989-419-01	PW BOARD
98	9-989-366-01	CONNECTOR, CORDE ASSY
99	9-989-299-01	CONNECTOR
100	9-989-300-01	CRANK SHAFT
101	9-989-301-01	SPRING
102	9-989-303-01	CASE, UPPER
103	9-989-304-01	CASE, LOWER
104	9-989-305-01	BLACKET
105	9-989-306-01	FOOT, RUBBER
106	9-989-420-01	LABEL(A) KBD-1F

NOTE:

1. **The shaded and ⚠-marked components are critical to safety. Replace only with same components as specified.**
2. Parts printed in Bold-Face type are normally stocked for replacement purposes. The remaining parts shown in this manual are not normally required for routine service work. Orders for parts not shown in Bold-Face type will be processed, but allow for additional delivery time.
3. Item with no part number and/or no description are not stocked because they are seldom required for routine service.

7-2. ELECTRICAL PARTS LIST

7-2-1. PU-35 Board

Ref.No.	Parts No.	Description
	A-8080-134-A	(AEP) . . . MOUNTED PCB, PU-35
	A-8080-151-A	(FRANCE) . . . MOUNTED PCB, PU-35
	1-526-835-11	SOCKET, 40P
	3-662-075-00	COVER, CONTROL (to RV1, RV2)
C2	**1-136-165-00**	**FILM 0.1 5% 50V**
C4	**1-102-074-00**	**CERAMIC 0.001 10% 50V**
C6	**1-123-298-00**	**ELECT 470 20% 6.3V**
C7	**1-161-974-00**	**CERAMIC 0.1 20% 16V**
C12	**1-123-382-00**	**ELECT 3.3 20% 50V**
C15	**1-102-959-00**	**CERAMIC 22PF 5% 50V**
C17	**1-123-332-00**	**ELECT 47 20% 16V**
C21	**1-161-974-00**	**CERAMIC 0.1 20% 16V**
C25	**1-123-369-00**	**ELECT 4.7 20% 25V**
C26	**1-123-369-00**	**ELECT 4.7 20% 25V**
C28	**1-136-173-00**	**FILM 0.47 5% 50V**
C29	**1-123-332-00**	**ELECT 47 20% 16V**
C33	**1-161-974-00**	**CERAMIC 0.1 20% 16V**
C38	**1-123-369-00**	**ELECT 4.7 20% 25V**
C39	**1-161-974-00**	**CERAMIC 0.1 20% 16V**
C40	**1-161-974-00**	**CERAMIC 0.1 20% 16V**
C41	**1-123-306-00**	**ELECT 47 20% 6.3V**
C42	**1-161-974-00**	**CERAMIC 0.1 20% 16V**
C46	**1-123-318-00**	**ELECT 33 20% 6.3V**
C52	**1-161-974-00**	**CERAMIC 0.1 20% 16V**
C54	**1-123-369-00**	**ELECT 4.7 20% 25V**
C57	**1-102-074-00**	**CERAMIC 0.001 10% 50V**
C58	**1-102-951-00**	**CERAMIC 15PF 5% 50V**
C59	**1-102-951-00**	**CERAMIC 15PF 5% 50V**
C60	**1-136-153-00**	**FILM 0.01 5% 50V**
C61	**1-136-169-00**	**FILM 0.22 5% 50V**
C64	**1-101-004-00**	**CERAMIC 0.01 50V**
C65	**1-123-356-00**	**ELECT 10 20% 16V**
C76	**1-162-113-00**	**CERAMIC 0.01 30% 16V**
C77	**1-162-113-00**	**CERAMIC 0.01 30% 16V**
C78	**1-162-113-00**	**CERAMIC 0.01 30% 16V**
C79	**1-162-113-00**	**CERAMIC 0.01 30% 16V**
C80	**1-123-306-00**	**ELECT 47 20% 6.3V**
C81	**1-162-621-91**	**CERAMIC 0.1 50V**
C82	**1-162-621-91**	**CERAMIC 0.1 50V**
C83	**1-162-113-00**	**CERAMIC 0.01 30% 16V**
C84	**1-162-113-00**	**CERAMIC 0.01 30% 16V**
C85	**1-162-621-91**	**CERAMIC 0.1 50V**
C86	**1-162-621-91**	**CERAMIC 0.1 50V**
C87	**1-162-113-00**	**CERAMIC 0.01 30% 16V**
C88	**1-162-113-00**	**CERAMIC 0.01 30% 16V**
C89	**1-162-113-00**	**CERAMIC 0.01 30% 16V**
C90	**1-162-113-00**	**CERAMIC 0.01 30% 16V**
C91	**1-162-113-00**	**CERAMIC 0.01 30% 16V**
C92	**1-161-974-00**	**CERAMIC 0.1 20% 16V**
C93	**1-123-369-00**	**ELECT 4.7 20% 25V**
C94	**1-102-962-00**	**CERAMIC 30PF 5% 50V**
C95	**1-161-974-00**	**CERAMIC 0.1 20% 16V**
C96	**1-123-332-00**	**ELECT 47 20% 16V**
C97	**1-162-113-00**	**CERAMIC 0.01 30% 16V**
C99	**1-102-074-00**	**CERAMIC 0.001 10% 50V**
C100	**1-162-113-00**	**CERAMIC 0.01 30% 16V**
C101	**1-162-113-00**	**CERAMIC 0.01 30% 16V**
C102	**1-162-113-00**	**CERAMIC 0.01 30% 16V**
C103	**1-102-074-00**	**CERAMIC 0.001 10% 50V**
C104	**1-162-113-00**	**CERAMIC 0.01 30% 16V**
C105	**1-162-113-00**	**CERAMIC 0.01 30% 16V**
C106	**1-162-113-00**	**CERAMIC 0.01 30% 16V**
C107	**1-162-113-00**	**CERAMIC 0.01 30% 16V**
C108	**1-162-113-00**	**CERAMIC 0.01 30% 16V**
C109	**1-162-113-00**	**CERAMIC 0.01 30% 16V**
C110	**1-162-113-00**	**CERAMIC 0.01 30% 16V**
C112	**1-162-113-00**	**CERAMIC 0.01 30% 16V**
C113	**1-162-113-00**	**CERAMIC 0.01 30% 16V**
C114	**1-162-113-00**	**CERAMIC 0.01 30% 16V**
C115	**1-162-113-00**	**CERAMIC 0.01 30% 16V**
C116	**1-162-113-00**	**CERAMIC 0.01 30% 16V**
C117	**1-162-621-91**	**CERAMIC 0.1 50V**
C118	**1-162-113-00**	**CERAMIC 0.01 30% 16V**
C119	**1-162-113-00**	**CERAMIC 0.01 30% 16V**
C120	**1-162-621-91**	**CERAMIC 0.1 50V**
C121	**1-162-113-00**	**CERAMIC 0.01 30% 16V**
C122	**1-162-113-00**	**CERAMIC 0.01 30% 16V**
C123	**1-162-113-00**	**CERAMIC 0.01 30% 16V**
C124	**1-161-974-00**	**CERAMIC 0.1 20% 16V**
C125	**1-162-113-00**	**CERAMIC 0.01 30% 16V**
CN3	**1-562-626-11**	**SOCKET**
CN4	1-564-377-11	PIN
CN5	**1-564-372-00**	**PIN, 9P**
CN6	**1-564-372-00**	**PIN, 9P**
CN7	1-564-376-11	PIN

NOTE:

1. **The shaded and ⚠-marked components are critical to safety.**
   Replace only with same components as specified.

2. Parts printed in **Bold-Face type** are normally stocked for replacement purposes. The remaining parts shown in this manual are not normally required for routine service work. Orders for parts not shown in Bold-Face type will be processed, but allow for additional delivery time.

Ref.No.	Parts No.	Description
CN9	1-506-610-11	PIN, 10P
CN10	1-506-530-11	PIN, 11P
CN12	1-564-242-00	PIN, 5P
CN13	1-564-241-00	PIN, 4P
CN16	1-562-249-00	SOCKET, 4P
CN19	1-560-060-00	PIN, 2P
CN26	1-560-060-00	PIN, 2P
CV1	**1-141-254-00**	**CAP, TRIMMER**
CV2	**1-141-254-00**	**CAP, TRIMMER**
D2	**8-719-815-55**	**1S1555**
D3	**8-719-981-01**	**ERA81-004**
D4	**8-719-101-49**	**RD5.1EL1**
D5	**8-719-200-02**	**10E-2**
D6	**8-719-815-55**	**1S1555**
D7	**8-719-815-55**	**1S1555**
D8	**8-719-815-55**	**1S1555**
D9	**8-719-908-57**	**SVC203**
D10	**8-719-815-55**	**1S1555**
D11	**8-719-815-55**	**1S1555**
IC1	**8-759-900-32**	**SN74LS32N**
IC2	**8-759-900-15**	**SN74LS15N**
IC4	**8-759-900-32**	**SN74LS32N**
IC5	**8-759-910-57**	**RP5C01**
IC6	**8-759-922-51**	**V9938**
IC7	**8-759-922-42**	**MB81464-12**
IC9	**8-759-901-74**	**SN74LS174N**
IC10	**8-759-901-38**	**SN74LS138N**
IC11	**8-759-901-39**	**SN74LS139N**
IC12	**8-759-922-42**	**MB81464-12**
IC14	**8-759-900-08**	**SN74LS08N**
IC15	**8-759-900-32**	**SN74LS32N**
IC16	**8-759-902-45**	**SN74LS245N**
IC17	**8-759-900-74**	**SN74LS74AN**
IC18	**8-759-922-52**	**S-3527**
IC19	**8-759-900-74**	**SN74LS74AN**
IC20	**8-759-900-04**	**SN74LS04N**
IC21	**8-759-900-00**	**SN74LS00N**
IC22	**8-759-131-11**	**μPC311C**
IC23	**8-759-903-67**	**SN74LS367AN**

Ref.No.	Parts No.	Description
IC24	**8-759-903-67**	**SN74LS367AN**
IC25	**8-759-903-67**	**SN74LS367AN**
IC26	**8-759-916-80**	**LH0080A**
IC27	**8-759-903-67**	**SN74LS367AN**
IC28	**8-759-903-67**	**SN74LS367AN**
IC29	**8-759-903-48**	**SN74LS348N**
IC30	**8-759-903-67**	**SN74LS367AN**
IC31	**8-759-903-67**	**SN74LS367AN**
IC32	**8-759-906-45**	**SN74LS645N**
IC33	**8-759-903-67**	**SN74LS367AN**
IC34	**8-759-903-67**	**SN74LS367AN**
IC35	**8-759-903-48**	**SN74LS348N**
IC36	**8-759-900-02**	**SN74LS02N**
IC37	**8-759-903-67**	**SN74LS367AN**
IC38	**8-759-900-38**	**SN74LS38N**
IC39	**8-759-903-67**	**SN74LS367AN**
IC40	**8-759-903-67**	**SN74LS367AN**
IC41	**8-759-925-62**	**(AEP) . . . MB83256-251**
IC41	**8-759-927-68**	**(FRANCE) . . . MB83256-253**
IC42	**8-759-900-30**	**SN74LS30N**
IC43	**8-759-900-30**	**SN74LS30N**
IC44	**8-759-974-06**	**SN7406N**
IC45	**8-759-902-45**	**SN74LS245N**
IC46	**8-759-903-67**	**SN74LS367AN**
IC47	**8-759-925-61**	**(AEP) . . . MB83256-256**
IC47	**8-759-927-69**	**(FRANCE) . . . MB83256-254**
IC48	**8-759-103-98**	**μPD41254C-15**
IC49	**8-759-901-57**	**SN74LS157N**
IC50	**8-759-922-98**	**CXD1032Q**
IC51	**8-759-902-44**	**SN74LS244N**
IC52	**8-759-911-41**	**TL431CP**
IC54	**8-759-103-98**	**μPD41254C-15**
IC55	**8-759-901-57**	**SN74LS157N**
IC56	**8-759-910-82**	**WD2793A-PL02**
IC57	**8-759-974-07**	**SN7407N**
IC58	**8-759-922-42**	**MB81464-12**
IC59	**8-759-922-42**	**MB81464-12**
L1	**1-408-413-00**	**MICRO 22**
L2	**1-408-413-00**	**MICRO 22**
L3	**1-408-413-00**	**MICRO 22**
L4	**1-408-413-00**	**MICRO 22**
L5	**1-408-413-00**	**MICRO 22**

NOTE:

1. **The shaded and ⚠-marked components are critical to safety.**
   Replace only with same components as specified.

2. Parts printed in **Bold-Face type** are normally stocked for replacement purposes. The remaining parts shown in this manual are not normally required for routine service work. Orders for parts not shown in Bold-Face type will be processed, but allow for additional delivery time.

Ref.No.	Parts No.	Description
Q1	8-729-173-36	2SA733-Q
Q2	8-729-173-36	2SA733-Q
Q3	8-729-194-57	2SC945-P
Q4	8-729-900-74	DTC143TS
Q5	8-729-900-74	DTC143TS
Q6	8-729-900-74	DTC143TS
Q7	8-729-900-74	DTC143TS
R1	1-249-429-11	CARBON 10K 5% 1/6W
R2	1-249-429-11	CARBON 10K 5% 1/6W
R4	1-249-429-11	CARBON 10K 5% 1/6W
R6	1-247-791-00	CARBON 22 5% 1/6W
R7	1-247-791-00	CARBON 22 5% 1/6W
R8	1-247-791-00	CARBON 22 5% 1/6W
R9	1-247-791-00	CARBON 22 5% 1/6W
R11	1-247-879-00	CARBON 100K 5% 1/6W
R12	1-249-429-11	CARBON 10K 5% 1/6W
R39	1-247-879-00	CARBON 100K 5% 1/6W
R14	1-247-823-00	CARBON 470 5% 1/6W
R15	1-247-819-00	CARBON 330 5% 1/6W
R16	1-249-437-11	CARBON 47K 5% 1/6W
R17	1-247-895-00	CARBON 470K 5% 1/6W
R19	1-247-837-00	CARBON 1.8K 5% 1/6W
R20	1-249-429-11	CARBON 10K 5% 1/6W
R21	1-247-799-00	CARBON 47 5% 1/6W
R22	1-249-429-11	CARBON 10K 5% 1/6W
R23	1-249-437-11	CARBON 47K 5% 1/6W
R24	1-247-819-00	CARBON 330 5% 1/6W
R25	1-247-879-00	CARBON 100K 5% 1/6W
R26	1-249-429-11	CARBON 10K 5% 1/6W
R27	1-249-429-11	CARBON 10K 5% 1/6W
R28	1-247-783-00	CARBON 10 5% 1/6W
R30	1-247-823-00	CARBON 470 5% 1/6W
R31	1-249-421-11	CARBON 2.2K 5% 1/6W
R33	1-249-425-11	CARBON 4.7K 5% 1/6W
R34	1-249-429-11	CARBON 10K 5% 1/6W
R35	1-249-437-11	CARBON 47K 5% 1/6W
R36	1-249-433-11	CARBON 22K 5% 1/6W
R37	1-249-433-11	CARBON 22K 5% 1/6W
R38	1-249-433-11	CARBON 22K 5% 1/6W
R13	1-247-831-00	CARBON 1K 5% 1/6W
R40	1-247-831-00	CARBON 1K 5% 1/6W
R41	1-249-433-11	CARBOM 22K 5% 1/6W

Ref.No.	Parts No.	Description
R45	1-249-429-11	CARBON 10K 5% 1/6W
R48	1-247-791-00	CARBON 22 5% 1/6W
R49	1-249-425-11	CARBON 4.7K 5% 1/6W
R50	1-247-791-00	CARBON 22 5% 1/6W
R51	1-249-429-11	CARBON 10K 5% 1/6W
R52	1-247-823-00	CARBON 470 5% 1/6W
R53	1-247-823-00	CARBON 470 5% 1/6W
R56	1-247-879-00	CARBON 100K 5% 1/6W
R57	1-249-429-11	CARBON 10K 5% 1/6W
R58	1-247-903-00	CARBON 1M 5% 1/6W
R59	1-249-425-11	CARBON 4.7K 5% 1/6W
R60	1-249-425-11	CARBON 4.7K 5% 1/6W
R61	1-247-815-00	CARBON 220 5% 1/6W
R63	1-247-879-00	CARBON 100K 5% 1/6W
R65	1-215-432-00	METAL 3K 1% 1/6W
R66	1-215-426-00	METAL 1.6K 1% 1/6W
R67	1-247-831-00	CARBON 1K 5% 1/6W
R71	1-247-791-00	CARBON 22 5% 1/6W
R72	1-247-791-00	CARBON 22 5% 1/6W
R73	1-247-791-00	CARBON 22 5% 1/6W
R80	1-249-429-11	CARBON 10K 5% 1/6W
R81	1-249-429-11	CARBON 10K 5% 1/6W
R82	1-249-429-11	CARBON 10K 5% 1/6W
R83	1-247-843-00	CARBON 3.3K 5% 1/6W
R84	1-247-841-00	CARBON 2.7K 5% 1/6W
R85	1-247-859-00	CARBON 15K 5% 1/6W
R86	1-249-429-11	CARBON 10K 5% 1/6W
R87	1-249-429-11	CARBON 10K 5% 1/6W
R89	1-249-429-11	CARBON 10K 5% 1/6W
R90	1-247-831-00	CARBON 1K 5% 1/6W
R91	1-249-429-11	CARBON 10K 5% 1/6W
R92	1-249-429-11	CARBON 10K 5% 1/6W
R93	1-249-429-11	CARBON 10K 5% 1/6W
R99	1-247-815-00	CARBON 220 5% 1/6W
RB1	1-235-724-11	RES, ENCAPSULATED CERMET
RB2	1-235-724-11	RES, ENCAPSULATED CERMET
RB3	1-235-724-11	RES, ENCAPSULATED CERMET
RB4	1-235-659-11	RES, ENCAPSULATED CERMET
RB5	1-235-736-11	RES, ENCAPSULATED CERMET
RB6	1-235-750-11	RES, ENCAPSULATED CERMET
RB7	1-235-724-11	RES, ENCAPSULATED CERMET
RB8	1-235-724-11	RES, ENCAPSULATED CERMET
RB9	1-235-724-11	RES, ENCAPSULATED CERMET
RB10	1-235-667-11	RES, ENCAPSULATED CERMET

NOTE:

1. **The shaded and ⚠-marked components are critical to safety.**
   Replace only with same components as specified.

2. Parts printed in **Bold-Face type** are normally stocked for replacement purposes. The remaining parts shown in this manual are not normally required for routine service work. Orders for parts not shown in Bold-Face type will be processed, but allow for additional delivery time.

Ref.No.	Parts No.	Description
RV1	**1-226-703-00**	**VAR, 10K**
RV2	**1-226-774-00**	**VAR, 47K**
RY1	**1-515-520-00**	**RELAY**
S1	**1-553-522-00**	**SWITCH, PUSH**
TH1	**1-800-198-XX**	**THERMISTOR S-1K**
X1	**1-567-098-00**	**VIBRATOR, CRYSTAL**
X2	**1-567-551-11**	**(AEP) . . . VIBRATOR, CRYSTAL**
X2	**1-567-530-11**	**(FRANCE) . . . VIBRATOR, CRYSTAL**
X3	**1-527-726-00**	**VIBRATOR, CRYSTAL**

7-2-2. DUS-111 Board

	1-464-577-11	**(AEP) . . . ENCODER, PAL**
	1-617-523-11	PC BOARD, DUS-111
	3-662-075-00	COVER, CONTROL (to RV501, RV502, RV503)
	4-608-929-01	(AEP) . . . SPACER, PC BOARD
C501	**1-123-310-00**	**ELECT 470 20% 10V**
C502	**1-123-307-00**	**ELECT 100 20% 10V**
C503	**1-136-171-00**	**FILM 0.33 5% 50V**
C504	**1-123-369-00**	**ELECT 4.7 20% 25V**
C505	**1-123-333-00**	**ELECT 100 20% 16V**
C506	**1-123-310-00**	**ELECT 470 20% 10V**
C507	**1-123-307-00**	**ELECT 100 20% 10V**
C508	**1-123-369-00**	**ELECT 4.7 20% 25V**
C509	**1-123-307-00**	**ELECT 100 20% 10V**
C510	**1-123-310-00**	**ELECT 470 20% 10V**
C511	**1-123-307-00**	**ELECT 100 20% 10V**
C512	**1-123-369-00**	**ELECT 4.7 20% 25V**
C513	**1-123-332-00**	**ELECT 47 20% 16V**
C514	**1-123-369-00**	**ELECT 4.7 20% 25V**
C515	**1-123-310-00**	**ELECT 470 20% 10V**
C516	**1-123-333-00**	**ELECT 100 20% 16V**
C517	**1-136-157-00**	**FILM 0.022 5% 50V**
C518	**1-136-165-00**	**FILM 0.1 5% 50V**
C519	**1-136-157-00**	**FILM 0.022 5% 50V**
C520	**1-102-935-00**	**CERAMIC 2PF 0.5PF 50V**
C521	**1-101-081-21**	**CERAMIC 130PF 5% 50V**
C522	**1-102-074-00**	**CERAMIC 0.001 10% 50V**
C523	**1-102-074-00**	**CERAMIC 0.001 10% 50V**
C524	**1-123-379-00**	**ELECT 0.47 20% 50V**
C525	**1-102-760-00**	**CERAMIC 68PF 5% 50V**
C526	**1-102-760-00**	**CERAMIC 68PF 5% 50V**
C527	**1-123-306-00**	**ELECT 47 20% 10V**
C528	**1-136-157-00**	**FILM 0.022 5% 50V**
C529	**1-123-306-00**	**ELECT 47 20% 6.3V**
C530	**1-161-974-00**	**CERAMIC 0.1 20% 16V**
CN501	**1-561-468-00**	**SOCKET, (DIN 8P)**
CN502	**1-561-468-00**	**SOCKET, (DIN 8P)**
CN503	**1-562-121-00**	**CONNECTOR, DIN 6P**
CN504	1-562-249-00	SOCKET, 4P
CN505	1-562-249-00	SOCKET, 4P
CN506	1-562-250-00	SOCKET, 5P
CN507	1-562-251-00	SOCKET, 6P
CN508	1-563-160-11	SOCKET, 13P
CV501	**1-141-254-00**	**(AEP) . . . CAP, TRIMMER**
D501	**8-719-901-59**	**(AEP) . . . KV1320**
D502	**8-719-815-55**	**(AEP) . . . 1S1555**
IC501	**8-759-700-14**	**NJM78M09A**
IC502	**8-757-925-20**	**CX-7925B**
IC503	**8-759-925-65**	**MSM6411B-30RS**
L501	**1-410-222-11**	**(AEP) . . . MICRO 8.2**
L502	**1-408-413-00**	**(AEP) . . . MICRO 22**
L503	**1-408-413-00**	**(AEP) . . . MICRO 22**

NOTE:

1. **The shaded and ⚠-marked components are critical to safety.**
   Replace only with same components as specified.

2. Parts printed in **Bold-Face type** are normally stocked for replacement purposes. The remaining parts shown in this manual are not normally required for routine service work. Orders for parts not shown in Bold-Face type will be processed, but allow for additional delivery time.

Ref.No.	Parts No.	Description
Q501	8-729-194-57	2SC945-P
Q502	8-729-194-57	2SC945-P
Q503	8-729-194-57	2SC945-P
Q504	8-729-194-57	2SC945-P
Q505	8-729-194-57	2SC945-P
Q506	8-729-194-57	2SC945-P
Q507	8-729-194-57	2SC945-P
Q508	8-729-194-57	2SC945-P
Q509	8-729-203-04	2SK30A-GR
Q510	8-729-178-54	2SC2785
Q511	8-729-178-54	2SC2785
R501	1-249-429-11	CARBON 10K 5% 1/6W
R502	1-249-429-11	CARBON 10K 5% 1/6W
R503	1-247-804-00	CARBON 75 5% 1/6W
R504	1-249-434-11	CARBON 27K 5% 1/6W
R505	1-249-421-11	CARBON 2.2K 5% 1/6W
R506	1-247-823-00	CARBON 470 5% 1/6W
R507	1-247-813-00	CARBON 180 5% 1/6W
R508	1-247-857-00	CARBON 12K 5% 1/6W
R509	1-247-831-00	CARBON 1K 5% 1/6W
R510	1-247-804-00	CARBON 75 5% 1/6W
R511	1-249-434-11	CARBON 27K 5% 1/6W
R512	1-249-421-11	CARBON 2.2K 5% 1/6W
R513	1-247-823-11	CARBON 470 5% 1/6W
R514	1-247-831-00	CARBON 1K 5% 1/6W
R515	1-247-831-00	CARBON 1K 5% 1/6W
R516	1-247-823-00	CARBON 470 5% 1/6W
R517	1-247-813-00	CARBON 180 5% 1/6W
R518	1-247-857-00	CARBON 12K 5% 1/6W
R519	1-247-831-00	CARBON 1K 5% 1/6W
R520	1-247-804-00	CARBON 75 5% 1/6W
R521	1-249-434-00	CARBON 27K 5% 1/6W
R522	1-249-421-11	CARBON 2.2K 5% 1/6W
R523	1-247-813-00	CARBON 180 5% 1/6W
R524	1-247-823-00	CARBON 470 5% 1/6W
R525	1-247-857-00	CARBON 12K 5% 1/6W
R526	1-247-831-00	CARBON 1K 5% 1/6W
R527	1-247-805-00	CARBON 82 5% 1/6W
R528	1-247-851-00	CARBON 6.8K 5% 1/6W
R529	1-247-851-00	CARBON 6.8K 5% 1/6W
R530	1-249-429-11	CARBON 10K 5% 1/6W

Ref.No.	Parts No.	Description
R531	1-247-851-00	CARBON 6.8K 5% 1/6W
R532	1-249-429-11	CARBON 10K 5% 1/6W
R533	1-247-804-00	CARBON 75 5% 1/6W
R534	1-249-425-00	CARBON 4.7K 5% 1/6W
R535	1-247-791-00	CARBON 22 5% 1/6W
R536	1-247-831-00	CARBON 1K 5% 1/6W
R537	1-247-843-00	CARBON 3.3K 5% 1/6W
R538	1-247-811-00	CARBON 150 5% 1/6W
R539	1-247-815-00	CARBON 220 5% 1/6W
R540	1-249-414-00	CARBON 560 5% 1/6W
R541	1-249-419-11	CARBON 1.5K 5% 1/6W
R542	1-247-843-00	CARBON 3.3K 5% 1/6W
R543	1-247-843-00	CARBON 3.3K 5% 1/6W
R544	1-249-425-11	CARBON 4.7K 5% 1/6W
R545	1-249-425-11	CARBON 4.7K 5% 1/6W
R546	1-249-425-11	CARBON 4.7K 5% 1/6W
R547	1-249-425-11	CARBON 4.7K 5% 1/6W
R548	1-249-425-11	CARBON 4.7K 5% 1/6W
R549	1-249-425-11	CARBON 4.7K 5% 1/6W
R550	1-247-851-00	CARBON 6.8K 5% 1/6W
R551	1-249-429-11	CARBON 10K 5% 1/6W
R552	1-249-429-11	CARBON 10K 5% 1/6W
R553	1-247-859-00	CARBON 15K 5% 1/6W
R554	1-249-433-11	CARBON 22K 5% 1/6W
R555	1-247-887-00	CARBON 220K 5% 1/6W
R556	1-247-809-00	CARBON 120K 5% 1/6W
RV501	1-230-520-11	VAR, 1K
RV502	1-230-520-11	VAR, 1K
RV503	1-230-520-11	VAR, 1K

7-2-3. CN-109 Board

	1-617-518-11	PC BOARD, CN-109
CN20	1-562-250-00	SOCKET, 5P
CN21	1-562-251-00	SOCKET, 6P
CN22	**1-563-005-31**	**14P**

NOTE:

1. **The shaded and ⚠-marked components are critical to safety.**
   Replace only with same components as specified.

2. Parts printed in **Bold-Face type** are normally stocked for replacement purposes. The remaining parts shown in this manual are not normally required for routine service work. Orders for parts not shown in Bold-Face type will be processed, but allow for additional delivery time.

Ref.No.	Parts No.	Description
7-2-4. CN-110 Board		
	1-617-521-11	PC BOARD, CN-110
CN20	**1-563-111-11**	**JACK 13P**
7-2-5. CN-120 Board		
	1-506-572-11	PIN 34P
	1-617-524-11	PC BOARD, CN-120
7-2-6. EX-101 Board		
	1-617-517-11	PC BOARD, EX-101
	1-558-338-11	CORD, CONNECTION (50 CORE)
C66	**1-161-974-00**	**CERAMIC 0.1 20% 16V**
C67	**1-161-974-00**	**CERAMIC 0.1 20% 16V**
C68	**1-161-974-00**	**CERAMIC 0.1 20% 16V**
C69	**1-123-306-00**	**ELECT 47 20% 6.3V**
C70	**1-123-369-00**	**ELECT 4.7 20% 25V**
C71	**1-123-369-00**	**ELECT 4.7 20% 25V**
C72	**1-161-974-00**	**CERAMIC 0.1 20% 16V**
C73	**1-161-974-00**	**CERAMIC 0.1 20% 16V**
C74	**1-161-974-00**	**CERAMIC 0.1 20% 16V**
C75	**1-123-306-00**	**ELECT 47 20% 6.3V**
CN1	**1-562-383-00**	**SOCKET**
CN2	**1-562-383-00**	**SOCKET**
R68	**1-249-433-11**	**CARBON 22K 5% 1/6W**
R69	**1-249-433-11**	**CARBON 22K 5% 1/6W**
R70	**1-249-429-11**	**CARBON 10K 5% 1/6W**
R100	**1-249-429-11**	**CARBON 10K 5% 1/6W**

Ref.No.	Parts No.	Description
7-2-7. LE-38 Board		
	1-617-520-11	PC BOARD, LE-38
D905	**8-719-930-50**	**GL-3NG5**
7-2-8. PS-101 Board		
	1-564-242-00	PIN, CONNECTOR 5P
	1-617-519-11	PC BOARD, PS-101
	1-533-183-11	**HOLDER, FUSE**
	1-535-416-00	**TERMINAL**
C901	**1-125-413-00**	**ELECT 22000 20% 16V**
C902	**1-124-772-11**	**ELECT 10000 20% 25V**
C903	**1-123-348-00**	**ELECT 470 20% 35V**
C904	**1-136-171-00**	**FILM 0.33 5% 50V**
C905	**1-136-171-00**	**FILM 0.33 5% 50V**
C906	**1-136-171-00**	**FILM 0.33 5% 50V**
C907	**1-123-307-00**	**ELECT 100 20% 10V**
C908	**1-123-333-00**	**ELECT 100 20% 16V**
C909	**1-123-333-00**	**ELECT 100 20% 16V**
C910	**1-101-005-00**	**CERAMIC 0.022 50V**
C911	**1-101-005-00**	**CERAMIC 0.022 50V**
C912	**1-101-005-00**	**CERAMIC 0.022 50V**
C913	**1-101-005-00**	**CERAMIC 0.022 50V**
C914	**1-101-005-00**	**CERAMIC 0.022 50V**
C915	**1-101-005-00**	**CERAMIC 0.022 50V**
C916	**1-101-005-00**	**CERAMIC 0.022 50V**
⚠C917	**1-130-456-00**	**FILM 0.022 20% 250V**
⚠C918	**1-130-456-00**	**FILM 0.022 20% 250V**
⚠C920	**1-161-742-00**	**CERAMIC 0.0022 20% 400V**
D901	**8-719-500-09**	**D5FB20F**
D902	**8-719-911-55**	**U05G**
D903	**8-719-911-55**	**U05G**
D904	**8-719-200-02**	**10E-2**

NOTE:

1. **The shaded and ⚠-marked components are critical to safety.**
   Replace only with same components as specified.

2. Parts printed in **Bold-Face type** are normally stocked for replacement purposes. The remaining parts shown in this manual are not normally required for routine service work. Orders for parts not shown in Bold-Face type will be processed, but allow for additional delivery time.

Ref.No.	Parts No.	Description
⚠F901	1-532-284-00	FUSE, TIME-LAG 0.63A
IC901	8-749-990-05	STR9005
IC902	8-749-931-22	SI-3122V
IC903	8-759-700-69	NJM79L12A
⚠L901	1-421-764-11	COIL

7-2-9. KEY Board

	9-989-419-01	PC Board			
	9-989-294-01	KEY BOARD			
	9-989-295-01	KEY BOARD (F1, F2, F3, F4, F5, HOME, INS, DEL, STOP)			
	9-989-296-01	KEY BOARD (CAP)			
C1	1-161-974-00	CERAMIC	0.1	20%	16V
C2	1-161-974-00	CERAMIC	0.1	20%	16V
C3	1-161-974-00	CERAMIC	0.1	20%	16V
C4	1-161-974-00	CERAMIC	0.1	20%	16V
C5	1-161-974-00	CERAMIC	0.1	20%	16V
C6	1-124-896-00	ELECT	33	20%	16V
LED1	8-719-934-35	BR3432S			
D1	8-719-815-55	DIODE	1S1555		
D2	8-719-815-55	DIODE	1S1555		
D3	8-719-815-55	DIODE	1S1555		
IC1	8-759-900-05	SN74LS05N			
IC2	8-759-901-45	SN74LS145N			
IC3	8-759-901-75	SN74LS175N			
IC4	8-759-903-67	SN74LS367AN			
R1	1-246-485-00	CARBON	3.3K	5%	1/4W
R2	1-246-485-00	CARBON	3.3K	5%	1/4W
R3	1-247-725-11	CARBON	10K	5%	1/4W
R4	1-247-725-11	CARBON	10K	5%	1/4W
R5	1-247-725-11	CARBON	10K	5%	1/4W
R6	1-247-725-11	CARBON	10K	5%	1/4W

NOTE:

1. **The shaded and ⚠-marked components are critical to safety.**
   Replace only with same components as specified.
2. Parts printed in **Bold-Face type** are normally stocked for replacement purposes. The remaining parts shown in this manual are not normally required for routine service work. Orders for parts not shown in Bold-Face type will be processed, but allow for additional delivery time.

Ref.No.	Parts No.	Description

7-3. PACKING MATERIAL AND ACCESSORY

1-558-343-11	**CORD, CONNECTION**
3-701-619-00	BAG, POLYETHYLENE, STANDARD
3-764-300-11	(AEP) . . . CHART, REFERENCE, MSX2 BASIC
3-764-300-31	CHART, REFERENCE, MSX2 BASIC
3-764-300-41	(AEP) . . . CHART, REFERENCE, MSX2 BASIC
3-764-300-51	(AEP) . . . CHART, REFERENCE, MSX2 BASIC
3-764-300-61	(AEP) . . . CHART, REFERENCE, MSX2 BASIC
3-764-300-71	(AEP) . . . CHART, REFERENCE, MSX2 BASIC
3-764-301-11	(AEP) . . . INSTRUCTION, MSX2 BASIC
3-764-301-31	INSTRUCTION, MSX2 BASIC
3-764-301-41	(AEP) . . . INSTRUCTION, MSX2 BASIC
3-764-301-51	(AEP) . . . INSTRUCTION, MSX2 BASIC
3-764-301-61	(AEP) . . . INSTRUCTION, MSX2 BASIC
3-764-301-71	(AEP) . . . INSTRUCTION, MSX2 BASIC
3-764-318-11	(AEP) . . . INSTRUCTION, MSX2 BASIC
3-764-318-31	INSTRUCTION, MSX2 BASIC
3-764-318-41	(AEP) . . . INSTRUCTION, MSX2 BASIC
3-764-318-51	(AEP) . . . INSTRUCTION, MSX2 BASIC
3-764-318-61	(AEP) . . . INSTRUCTION, MSX2 BASIC
3-764-318-71	(AEP) . . . INSTRUCTION, MSX2 BASIC
3-765-008-11	(AEP) . . . MANUAL, INSTRUCTION
3-765-008-41	(AEP) . . . MANUAL, INSTRUCTION
3-765-008-51	(AEP) . . . MANUAL, INSTRUCTION
3-765-008-61	(FRANCE) . . . MANUAL, INSTRUCTION
4-605-109-03	(AEP) . . . SEAL, GRAPHIC
4-605-110-03	(AEP) . . . SHEET, GRAPHIC
4-605-170-01	(FRANCE) . . . SEAL, GRAPHIC
4-605-171-01	(FRANCE) . . . SHEET, GRAPHIC
4-608-310-02	BOX, ACCESSORY
4-608-311-01	CUSHION (KEYBOARD LEFT)
4-608-312-01	CUSHION (KEYBOARD RIGHT)
4-608-314-01	CUSHION (MAIN LEFT)
4-608-315-01	CUSHION (MAIN RIGHT)
4-609-321-22	(AEP) . . . INDIVIDUAL CARBON
4-609-321-32	(FRANCE) . . . INDIVIDUAL CARBON
4-609-356-01	**SHEET, PROTECTION**
4-832-728-00	SHEET, PROTECTION

HB-F500P/F500F

SERVICE MANUAL

AEP Model

: HB-F500P

France Model

: HB-F500F

No. 1

CORRECTION

File this Correction with the Service Manual.

—— : corrected portion

- **Service Manual Page 7-3.**

No.	Parts No.	Description
68	9-989-589-01	FRONT BEZEL
	⬇	
68	9-989-204-01	FRONT BEZEL

HOME COMPUTER

SONY®

9-975-603-91

Sony Corporation
Audio Group

English
87H0532-1
Printed in Japan
© 1987. 8